Standard and HIflo ranges - Gas fired storage water heaters for natural gas, LPG/Butane

Standard Range 24/39, 32/40, 40/61, 63/62, and 84/87 Permanent Pilot and Auto Ignition
HIflo Range 32/143, 65/173, 81/264, 62/341, 54/418 & 54/440 Permanent Pilot and Auto Ignition with Flue Damper 'E'/'F' Series, 'G' Series
Standard Range L24/31, L32/35, L40/36, L63/71 & L84/74, Permanent Pilot G Series
HIflo Range L32/143, L65/169, L81/251, L62/309 & L54/399, Permanent Pilot E/F Series

Please read and understand these instructions before commencing installation and leave this manual with the customer for future reference.

Andrews. Built to perform.

ANDREWS
WATER HEATERS

Reproduction of any information in this publication by any method is not permitted unless prior written approval has been obtained from Andrews Water Heaters.

Andrews Storage Water Heaters have been designed and manufactured to comply with current international standards of safety. In the interests of the health and safety of personnel and the continued safe, reliable operation of the equipment, safe working practices must be employed at all times. The attention of UK users is drawn to their responsibilities under the Health and Safety Regulations 1993.

All installation and service on Andrews Water Heaters must be carried out by properly qualified personnel and, therefore, no liability can be accepted for any damage or malfunction caused as a result of intervention by unauthorised personnel.

Andrews Water Heaters' policy is one of continuous product improvement and, therefore, the information in this manual, whilst completely up to date at the time of publication, may be subject to revision without prior notice.

Further information and assistance can be obtained from:

Customer support
Monday - Friday
8am - 5pm

Sales: 0345 070 1055
Technical: 0345 070 1057
Email: service@baxicommercialdivision.co.uk
Website: www.andrewswaterheaters.co.uk
Twitter: @andrewsWH

Copyright Andrews Water Heaters 2015

Contents

1 General and safety information 6
1.1 General information 6
1.2 British standards and codes of practice 6
1.2.1 Standard range & Hiflo range 6
1.3 Health and safety regulations 1993 8
1.4 Effectiveness in combating legionella 8

2 Technical data 9
2.1 Standard range (Natural Gas) 9
2.2 Standard range (LPG) 10
2.3 Hiflo range (Natural Gas) 11
2.4 Hiflo range (LPG) 12
2.5 ErP data 13

3 Installation 15
3.1 Introduction 15
3.1.1 The law requires that installation is carried out by a properly qualified person 15
3.2 Assembling the draught diverter 15
3.3 Location 16
3.4 Gas supply 17
3.4.1 Installation of the LPG supply 17
3.5 Electrical supply - auto ignition units 18
3.5.1 Hiflo models - standard range models 18
3.6 Flue systems 20
3.7 Air supply and ventilation 22
3.8 Water quality and treatment 24
3.9 Water connections 26
3.9.1 Hydrojet systems 26
3.9.2 Vented systems, standard range 27
3.9.3 Correx powered anodes 27
3.9.4 To install kit 27
3.9.5 Test the installation 29
3.9.6 Unvented systems, standard range 29
3.9.7 Vented systems, Hiflo range 31
3.9.8 Unvented systems, Hiflo range 34

4 Commissioning 36
4.1 Standard range permanent pilot models 36
4.1.1 Lighting the burner 36
4.1.2 Shutting off the burner 36
4.1.3 Checking main burner pressure 37
4.2 Hiflo range permanent pilot models 37
4.2.1 Lighting the burner 37
4.2.2 Shutting off the burner 38
4.2.3 Checking main burner pressure 38
4.2.4 Check correct shape and size of pilot flame 38
4.2.5 Checking for spillage at the draught diverter 38
4.3 Standard range auto ignition models 39
4.3.1 Lighting the burner 39
4.3.2 Shutting off the burner 39
4.3.3 Checking mains burner pressure 39
4.4 Hiflo range auto ignition models 40
4.4.1 Lighting the burner 40
4.4.2 Shutting off the burner 40
4.4.3 Checking mains burner pressure 40
4.5 Instructing the user 41
4.5.1 All standard and Hiflo models 41
4.6 Users safety guide 42

5 Operation 43
5.1 Standard range 43
5.2 Hiflo range 43
5.2.1 Permanent pilot models, operating sequence 43
5.3 HIflo and standard range auto ignition 44
5.3.1 Auto ignition units, operating sequence. Hiflo and standard range 44
5.3.2 ECO (energy cut - off) 44
5.3.3 Temperature stratification (stacking) 44

6 Servicing 45
6.1 Introduction 45
6.1.1 Servicing must be carried out by a properly qualified person 45
6.2 Pre - service options 45
6.2.1 Servicing, carry out the following operations 45
6.3 Burner assembly standard range 45
6.3.1 The burner assembly should be checked and cleaned annually 45
6.4 Burner assembly Hiflo range 46
6.4.1 The burner assembly should be checked and cleaned annually 46
6.5 Gas control valve standard range 47
6.6 Gas control valve Hiflo range 47
6.7 Fuel ways standard range 48
6.8 Fuel ways Hiflo range 48
6.9 Cleaning the storage vessel all models 49
6.9.1 Descaling 49
6.10 Magnesium anode(s) all models 50
6.11 Safety valve Hiflo models 50
6.12 Restart all models 50

7 Replacing components, Hiflo range 51
7.1 Gas control valve 51
7.2 User - adjustable control thermostat with limit sensor phial and overheat ECO 51
7.3 Thermopile/ pilot, burner/ pilot restrictor 52
7.4 Burner 53

8 Fault finding 54
8.1 Permanent pilot models standard and Hiflo range 54
8.2 All models 55
8.3 Auto ignition units standard range 55
8.4 Auto ignition units Hiflo models 56
8.5 Checking “correx” anodes 56
8.6 LPG permanent pilot models - LPG HIflo ranges 57

9 Parts list and illustrations 58
9.1 Standard Range models 24/29, 32/40, 40/61, 63/62 (Natural Gas) 58
9.2 Standard Range models 84/87 (Natural Gas) 58
9.3 Standard Range models parts list (Natural Gas) 59
9.4 Standard Range LPG models L24/31, L32/35, L40/36, L63/71 60
9.5 Standard Range LPG model L84/74 60
9.6 Standard Range models parts list (LPG) 61
9.7 HIflo models 32/143 (Natural Gas) 63
9.8 HIflo models 65/173 and 81/264 (Natural Gas) 63
9.9 HIflo models parts list (Natural Gas) 64
9.10 HIflo models 62/341 and 54/418/440 (Natural Gas) 65
9.11 HIflo models parts list (Natural Gas) 66
9.12 HIflo LPG model L32/143 67
9.13 HIflo LPG models L65/169, L81/251 67
9.14 HIflo P.P Water Heater parts list (LPG) 68
9.15 HIflo LPG models L62/309, L54/399 69
9.16 HIflo P.P Water Heater parts list (LPG) 70
9.17 Unvented systems kit - standard range 71
9.18 Unvented systems kit - Hiflo range 71
9.19 Unvented systems kit - standard range parts list 72
9.20 Unvented systems kit - Hiflo range parts list 72
9.21 24 Volt auto system kit B217 73
9.22 24 Volt auto system kit B258 73
9.23 24 Volt auto system kit standard range parts list 74
9.24 24 Volt auto system kit Hiflo parts list 74

10 Appendix **75**
10.1 Hiflo auto ignition “G” series addendum 75
10.1.1 Features of honeywell integrated control system 75
10.2 Specifications 75
10.3 Sequence of operations 76
10.4 Troubleshooting 77
10.4.1 Using control display for servicing the water heater 79
10.4.2 Service mode 80
10.4.3 To change the maximum setpoint limit (max setpoint) for the temperature setpoint 83
10.4.4 Display of water temperature 84
10.4.5 To display flame sense current of the pilot flame sensor 85
10.4.6 To display and change temperature setpoint 85
10.4.7 To display and change temperature format (°F/°C) 86
10.4.8 Error codes and error history display 88
10.4.9 Error code history 88
10.4.10 To view previous error codes 88
10.4.11 Error code definitions 90
10.4.12 Resetting lockout conditions 91
10.4.13 Resetting error codes in hard lockout conditions 91
10.5 Service procedure D24 - I 92
10.5.1 Thermostat circuit testing 92
10.5.2 Sensor resistance testing 94
10.5.3 Sensor resistance at various temperatures 94
10.6 Service procedure D24 - II 95
10.6.1 Pilot operation testing 95
10.6.2 Pilot inspection 96
10.6.3 Pilot operation testing 97
10.7 Service procedure D24 - III 98
10.7.1 Main burner operation testing 98
10.7.2 Checking manifold pressure 99
10.8 Service procedure D24 - IV 100
10.8.1 Main burner & pilot removal and inspection 100
10.8.2 Control board replacement 101
10.9 Service procedure D24 - V 102
10.9.1 Flue baffle removal and inspection 102
10.10 Service procedure D24 - VI 103
10.10.1 Anode removal and inspection 103
10.11 General assembly 105
10.12 Burner assembly 106
10.13 Control box assembly 107
10.14 General assembly parts list 108
10.15 Burner assembly parts list 109
10.16 Control box assembly parts list 110
10.17 Dismantling, disposal and recycling 111

1 General and safety information

1.1 General information

The Andrews Water Heater has been designed for use with NATURAL GAS only and is manufactured to give an efficient, reliable and long service life.

To ensure the continued, trouble-free operation of your heater at maximum efficiency, it is essential that correct installation, commissioning, operation and service procedures are carried out strictly in accordance with the instructions given in this manual. By law, installation and commissioning of the heater must be carried out by properly qualified personnel.

The heater(s) must be installed in accordance with the following requirements;
The current GAS SAFETY (INSTALLATION AND USE) REGULATIONS
The current BUILDING REGULATIONS
The Water Supply (WATER FITTINGS) REGULATIONS 1999

Additionally, installation should be performed in accordance with all relevant requirements of the Gas Supplier, Local Authority and recommendations of the British Standards and Codes of Practice detailed below.

1.2 British standards and codes of practice

1.2.1 Standard Range & Hiflo Range

BS 6700:	Specification for design, installation, testing and maintenance of services supplying water for domestic use within buildings and their curtilages. This standard supersedes the following British Standards and Codes of Practice: CP99, CP310, CP324, 202, CP342 Part 2, Centralised Hot Water Supply.
BS 5440	Installation of flues and ventilation for gas appliances of rated output not exceeding 60kW.
Part 1:	Specification for installation of flues.
Part 2:	Specification for installation of ventilation for gas appliances.
BS 5546:	Installation of gas hot water supplies for domestic purposes.
BS 6891	Installation of low pressure gas pipework of up to 28mm in domestic premises.
BS 7206:	Specification for unvented hot water storage units and packages.

BS EN 806	(Parts 1 - 5) Specifications for installations inside buildings conveying water for human consumption.
BS 6644	Installation of gas fired water boilers of rated inputs between 70kW and 1.8MW.
BS EN 12897	Water supply. Specification for indirectly heated unvented (closed) storage water heaters.
IGE/UP/1A,1B	Strength/tightness testing and direct purging.
IGE/UP/2	Installation pipework.
IGE/UP/10 - 1	(Edition 4): Installation of gas appliances in industrial and commercial premises.

IGE/UP/10 Pt.1 Edition 2	Installation of Gas Appliances in Industrial and Commercial Premises.

1.3 Health and safety regulations 1993

It is the duty of manufacturers and suppliers of products for use at work to ensure, so far as is practicable, that such products are safe and without risk to health when properly used and to make available to users, adequate information about their safe and proper operation.

Andrews Water Heaters should only be used in the manner and purpose for which they were intended and in accordance with the instructions in this manual. Although the heaters have been manufactured with paramount consideration to safety, certain basic precautions specified in this manual must be taken by the user.

It is imperative that all users of the heater must be provided with all the information and instruction necessary to ensure correct and safe operation.

1.4 Effectiveness in combating legionella

Water systems in buildings have been associated with outbreaks of Legionnaires' Disease, particularly in health care facilities where occupants are significantly more susceptible to infection.

In recognition of the risks in hospitals, a Code of Practice for the Control of Legionella in Health Care premises has been issued by the Department of Health (1991). Codes of Practice applicable to other premises have been published by other organisations, principally the Health and Safety Executive (HS)(G70) and the Chartered Institute of Building Services Engineers (CIBSE, TM13).

All Codes of Practice draw attention to the design and operation of water systems with reference to avoidance of factors that favour colonisation by Legionella bacteria. These factors include stagnation, lukewarm conditions (20°C to 45°C) and the accumulation of debris, scale and corrosion in the base of tanks and calorifiers.

Andrews Water Heaters has commissioned an independent evaluation of their products to investigate their resistance to build-up of legionella bacteria.

Experiments were conducted to determine whether, following a substantial challenge by legionella pneumophila, after overnight and stagnation conditions, the system was rendered free from viable recoverable legionella. It was found that at 61°C, following a challenge of approximately 107 organisms per litre, within one hour, more than 99.999% of organisms had been killed. After a subsequent stagnation period, sampling did not reveal any residual contamination. The design of the base of the water heater precludes legionella colonisation, even after build-up of debris. The burner positioning ensures that the water at the bottom of the heater reaches the same, or higher temperature as in the rest of the heater.

Based on data obtained through experiment, the Andrews Water Heater can be described as legionella resistant as it is considered unlikely that, at the temperature tested, the organism would colonise the water heater and present a possible health risk.

2 Technical data

2.1 Standard Range (Natural Gas)

Andrews Model No.		24/39	32/40	40/61	63/62	84/87
Storage Capacity	l	109	145	182	286	382
Recovery thro' 50°C	l/h	156	159	243	247	348
Recovery thro' 56°C	l/h	139	142	217	220	311
Heat Input Gross	kW	12	12.5	19	19	26
Heat Input Net	kW	11	11.4	17	17	24
Gas		NATURAL CAT I_2H				
Burner Gas Pressure	mbar	10	10	10	10	10
Max. Gas Input Pressure	mbar	35	35	35	35	35
Gas Flow Rate	m^3/h	1.12	1.16	1.78	1.78	2.43
Gas Connection	Rc (in BSP Int)	1/2	1/2	1/2	1/2	1/2
Flue Gas Temp.	°C	200	205	195	160	125
Flue Gas Volume	m^3/h	17	18	26	31	37
Gas Injector Orifice Diameter	mm	2.95	3.05	3.86	3.86	4.22
Flue Size (Secondary)	mm	100	100	100	125	125
Cold Water Feed Connection	R (in BSP/Exl)	1	1	1	1	1 1/4
Hot Water Flow Connection	R (in BSP/Exl)	1	1	1	1	1 1/4
*Return Connection	Rp (in BSP/Exl)	3/4	3/4	3/4	3/4	3/4
Drain Port Size	R (in BSP/Exl)	3/4	3/4	3/4	3/4	3/4
Max. Working Water Pressure (vented)	bar	10.3	10.3	10.3	10.3	10.3
Max. Working Water Pressure (unvented)	bar	5.5	5.5	5.5	5.5	5.5
Water Test Pressure	bar	20.7	20.7	20.7	20.7	20.7
Weight Empty	kg	43	57	65	110	181
Weight Full	kg	151	202	247	396	562
Shipping Weight	kg	44	59	68	120	194
Shipping Dimensions Depth	mm	546	587	587	692	914
Shipping Dimensions Width	mm	486	537	537	651	762
Shipping Dimensions Height	mm	1194	1245	1499	1575	1829

2.2 Standard Range (LPG)

Andrews Model No.		L24/31	L32/35	L40/36	L63/71	L84/74
Storage Capacity	l	109	145	182	286	382
Recovery thro' 50°C	l/h	141	163	163	322	336
Recovery thro' 56°C	l/h	113	127	131	258	269
Heat Input Gross	kW	9.5	11.0	11.0	22.0	22.0
Heat Input Net	kW	8.6	10	10	20	20
Gas		LPG CAT I_3				
Inlet Gas Pressure Propane	mbar	37	37	37	37	37
Inlet Gas Pressure Butane	mbar	28	28	28	28	28
Gas Flow Rate	m^3/h	0.36	0.41	0.41	0.83	0.83
Gas Connection	Rc (in BSP Int)	1/2	1/2	1/2	1/2	1/2
Flue Gas Temp.	°C	180	180	185	125	130
Flue Gas Volume	m^3/h	16	16	23	28	34
Gas Injector Orifice Diameter	mm	1.5	1.6	1.6	2.25	2.25
Flue Size (Secondary)	mm	100	100	100	125	125
Cold Water Feed Connection	R (in BSP/Exl)	1	1	1	1	1 1/4
Hot Water Flow Connection	R (in BSP/Exl)	1	1	1	1	1 1/4
*Return Connection	Rp (in BSP/Exl)	3/4	3/4	3/4	3/4	3/4
Drain Port Size	R (in BSP/Exl)	3/4	3/4	3/4	3/4	3/4
Max. Working Water Pressure (vented)	bar	10.3	10.3	10.3	10.3	10.3
Max. Working Water Pressure (unvented)	bar	5.5	5.5	5.5	5.5	5.5
Water Test Pressure	bar	20.7	20.7	20.7	20.7	20.7
Weight Empty	kg	43	57	65	110	181
Weight Full	kg	151	202	247	396	562
Shipping Weight	kg	44	59	68	120	194
Shipping Dimensions Depth	mm	546	587	587	692	914
Shipping Dimensions Width	mm	486	537	537	651	762
Shipping Dimensions Height	mm	1194	1245	1499	1575	1829

2.3 HIflo Range (Natural Gas)

Andrews Model No.		32/143	65/173	81/264	62/341	54/418	54/440
Storage Capacity	l	145	295*	368*	282*	245*	245
Recovery thro' 50°C	l/h	539	691	1053	1359	1668	1745
Recovery thro' 56°C	l/h	508	617	940	1214	1489	1558
Recovery thro' 72°C	l/h	395	480	731	944	1188	1212
Heat Input Gross	kW	42.8	50	80	102	128	139
Heat Input Net	kW	39	45	73	93	116	126
Gas		NATURAL CAT I_2H					
Burner Gas Pressure Permanent Pilot	mbar	6.8	6.8	6.8	6.8	6.8	N/A
Burner Gas Pressure Auto Ignition	mbar	10	10	10	10		11.25
Max. Gas Input Pressure	mbar	35	35	35	35	35	
Gas Flow Rate	m^3/h	4.0	4.68	7.44	9.48	11.94	13.14
Gas Connection	Rc (in BSP Int)	3/4	3/4	3/4	3/4	3/4	3/4
Flue Gas Temp.	°C	117	140	150	195	185	215
Flue Gas Volume	m^3/h	62	73	116	149	186	202
Gas Injector Orifice Diameter Permanent Pilot	mm	2.69	2.87	3.66	3.45	3.50	N/A
Gas Injector Orifice Diameter Permanent Pilot	mm	2.40	2.58	3.25	3.18	N/A	3.26
Flue Size (Secondary)	mm	150	150	200	200	250	250
Cold Water Feed Connection	R (in BSP/Exl)	1 1/2	1 1/2	1 1/2	1 1/2	1 1/2	1 1/2
Hot Water Flow Connection	R (in BSP/Exl)	1 1/2	1 1/2	1 1/2	11/2	1 1/2	1 1/2
*Return Connection	Rp (in BSP/Exl)	3/4	3/4	3/4	3/4	3/4	3/4
Drain Port Size	R (in BSP/Exl)	3/4	3/4	3/4	3/4	3/4	3/4
Max. Working Water Pressure (vented)	bar	10.3	10.3	10.3	10.3	10.3	10.3
Max. Working Water Pressure (unvented)	bar	5.5	5.5	5.5	5.5	5.5	5.5
Water Test Pressure	bar	20.7	20.7	20.7	20.7	20.7	20.7
Weight Empty	kg	190	200	289	257	269	269
Weight Full	kg	335	495	656	538	514	514
Shipping Weight	kg	199	223	316	282	293	293
Shipping Dimensions Depth	mm	902	914	914	914	914	914
Shipping Dimensions Width	mm	768	762	762	762	762	762
Shipping Dimensions Height	mm	1270	1960	2083	1960	1960	1960

* If the water heater is to be used on an unvented system, the combined temperature/ pressure relief valve must be fitted directly into the tank. The secondary return is then connected to the drain port via a suitable tee.

2.4 HIflo Range (LPG)

Andrews Model No.		L32/143	L65/169	L81/251	L62/309	L54/399
Storage Capacity	l	145	295	386	282	245
Recovery thro' 44°C	l/h	649	788	1140	1403	1812
Recovery thro' 56°C	l/h	517	613	913	1122	1449
Recovery thro' 72°C	l/h	399	472	699	862	1117
Heat Input Gross	kW	41.8	49	76	92.5	122
Heat Input Net	kW	38	44	69	84	111
Gas		LPG CAT I_3				
Gas Inlet Pressure Propane	mbar	37	37	37	37	37
Gas Inlet Pressure Butane	mbar	28	28	28	28	28
Gas Flow Rate Propane	m^3/h	1.61	1.89	2.93	3.58	4.71
Gas Flow Rate Butane	m^3/h	1.26	1.48	2.29	2.79	3.68
Gas Connection	Rc (in BSP Int)	3/4	3/4	3/4	3/4	3/4
Flue Gas Temp.	°C	125	125	170	190	170
Flue Gas Volume	m^3/h	57	67	104	126	167
Gas Injector Orifice Diameter	mm	1.60	1.70	1.85	1.78	1.78
Flue Size (Secondary)	mm	150	150	200	200	250
Cold Water Feed Connection	R (in BSP/Exl)	1 1/2	1 1/2	1 1/2	1 1/2	1 1/2
Hot Water Flow Connection	R (in BSP/Exl)	1 1/2	1 1/2	1 1/2	11/2	1 1/2
*Return Connection	Rp (in BSP/Exl)	3/4	3/4	3/4	3/4	3/4
Drain Port Size	R (in BSP/Exl)	3/4	3/4	3/4	3/4	3/4
Max. Working Water Pressure (vented)	bar	10.3	10.3	10.3	10.3	10.3
Max. Working Water Pressure (unvented)	bar	5.5	5.5	5.5	5.5	5.5
Max. Test Pressure	bar	20.7	20.7	20.7	20.7	20.7
Weight Empty	kg	190	200	289	257	269
Weight Full	kg	335	488	656	618	514
Shipping Weight	kg	199	230	316	287	293
Shipping Dimensions Depth	mm	902	914	914	914	914
Shipping Dimensions Width	mm	768	762	762	762	762
Shipping Dimensions Height	mm	1270	1960	2210	1960	1960

* If the water heater is to be used on an unvented system, the combined temperature/ pressure relief valve must be fitted directly into the tank. The secondary return is then connected to the drain port via a suitable tee.

2.5 ErP data

Standard Range Permanent Pilot		24/39	32/40	40/61	63/62	84/87
Declared load profile		L	XL	XL	XXL	XXL
Water heating energy efficiency class		B	B	B	C	C
Water heating energy efficiency	%	56	63	60	56	59
Annual energy consumption	kwh(1)	0	0	0	0	0
Annual energy consumption	Gj(2)	16	24	25	35	32
Other load profiles for which the water heater is suitable to use and the corresponding water heating energy efficiency and annual electricity consumption(3)		-	-	-	-	-
Thermostat temperature setting	°C	60	60	60	60	60
Sound power level L_{WA} indoors	dB	53	47	47	42	43
Ability to off-peak hours functioning(3)		-	-	-	-	-
Enables smart control settings(4)		-	-	-	-	-

(1) Electricity
(2) Fuel
(3) If applicable.
(4) If smart control settings value is "1", the water heating energy efficiency and annual electricity and fuel consumption only relate to enabled smart control settings.

Standard Range Auto		24/39	32/40	40/61	63/62	84/87
Declared load profile		L	XL	XL	XXL	XXL
Water heating energy efficiency class		B	B	B	C	C
Water heating energy efficiency	%	54	57	56	56	55
Annual energy consumption	kwh(1)	9	11	5	9	8
Annual energy consumption	Gj(2)	17	27	27	35	35
Other load profiles for which the water heater is suitable to use and the corresponding water heating energy efficiency and annual electricity consumption(3)		-	-	-	-	-
Thermostat temperature setting	°C	60	60	60	60	60
Sound power level L_{WA} indoors	dB	53	47	47	42	43
Ability to off-peak hours functioning(3)		-	-	-	-	-
Enables smart control settings(4)		-	-	-	-	-

(1) Electricity
(2) Fuel
(3) If applicable.
(4) If smart control settings value is "1", the water heating energy efficiency and annual electricity and fuel consumption only relate to enabled smart control settings.

Hiflo		32/143	65/173	32/143	65/169
Declared load profile		XL	XXL	XL	XXL
Water heating energy efficiency class		B	B	B	B
Water heating energy efficiency	%	63	66	63	66
Annual energy consumption	kwh(1)	0	0	0	0
Annual energy consumption	Gj(2)	24	29	24	29
Other load profiles for which the water heater is suitable to use and the corresponding water heating energy efficiency and annual electricity consumption(3)		-	-	-	-
Thermostat temperature setting	°C	65	60	65	60
Sound power level L_{WA} indoors	dB	47	49	47	49
Ability to off-peak hours functioning(3)		-	-	-	-
Enables smart control settings(4)		-	-	-	-

(1) Electricity
(2) Fuel
(3) If applicable.
(4) If smart control settings value is "1", the water heating energy efficiency and annual electricity and fuel consumption only relate to enabled smart control settings.

Standard Range Natural Gas Permanent Pilot			24/39	32/40	40/61	63/62	84/87
Daily electricity consumption	Q_{elec}	kWh	0.001	0.001	0.001	0.001	0.001
Declared load profile			L	XL	XL	XXL	XXL
Sound power level, indoors	L_{WA}	dB	53	47	47	42	43
Daily fuel consumption	Q_{fuel}	kWh	12.460	18.271	19.183	26.628	24.092
Emissions of nitrogen oxides	NO_x	mg/kWh	92	95	102	102	102
Weekly fuel consumption with smart controls	$Q_{fuel, week, smart}$	kWh	-	-	-	-	-
Weekly electricity consumption with smart controls	$Q_{elec, week, smart}$	kWh	-	-	-	-	-
Weekly fuel consumption without smart controls	$Q_{fuel, week}$	kWh	-	-	-	-	-
Weekly electricity consumption without smart controls	$Q_{elec, week}$	kWh	-	-	-	-	-
Storage volume	V	l	114	151	189	284	379
Mixed water at 40 °C	V40	l	170	229	333	467	505
Harmonised standards applied	EN: 13203-2						
Specific precautions that shall be taken when the water heater is assembled, installed or maintained:	Before any assembly, installation or maintenance the installation and operation manual has to be read attentively and to be followed						

Standard Range Natural Gas Auto			24/39	32/40	40/61	63/62	84/87
Daily electricity consumption	Q_{elec}	kWh	0.053	0.06	0.036	0.039	0.038
Declared load profile			L	XL	XL	XXL	XXL
Sound power level, indoors	L_{WA}	dB	53	47	47	42	43
Daily fuel consumption	Q_{fuel}	kWh	12.460	18.271	19.183	26.628	24.092
Emissions of nitrogen oxides	NO_x	mg/kWh	92	95	102	102	102
Weekly fuel consumption with smart controls	$Q_{fuel, week, smart}$	kWh	-	-	-	-	-
Weekly electricity consumption with smart controls	$Q_{elec, week, smart}$	kWh	-	-	-	-	-
Weekly fuel consumption without smart controls	$Q_{fuel, week}$	kWh	-	-	-	-	-
Weekly electricity consumption without smart controls	$Q_{elec, week}$	kWh	-	-	-	-	-
Storage volume	V	l	114	151	189	284	379
Mixed water at 40 °C	V40	l	155	271	333	420	916
Harmonised standards applied	EN: 13203-2						
Specific precautions that shall be taken when the water heater is assembled, installed or maintained:	Before any assembly, installation or maintenance the installation and operation manual has to be read attentively and to be followed						

Hiflo Natural Gas			32/143	65/173	81/264	62/341	54/418	54/440
Daily electricity consumption	Q_{elec}	kWh	0.053	0.06	0.036	0.039	0.038	0.001
Declared load profile			XL	XXL	XXL	XXL	XXL	XXL
Sound power level, indoors	L_{WA}	dB	47	49	62	59	61	60
Daily fuel consumption	Q_{fuel}	kWh	18.164	22.191	23.469	22.365	21.440	22.162
Emissions of nitrogen oxides	NO_x	mg/kWh	160	185	181	185	185	185
Weekly fuel consumption with smart controls	$Q_{fuel, week, smart}$	kWh	-	-	-	-	-	-
Weekly electricity consumption with smart controls	$Q_{elec, week, smart}$	kWh	-	-	-	-	-	-
Weekly fuel consumption without smart controls	$Q_{fuel, week}$	kWh	-	-	-	-	-	-
Weekly electricity consumption without smart controls	$Q_{elec, week}$	kWh	-	-	-	-	-	-
Storage volume	V	l	144	303	379	284	246	246
Mixed water at 40 °C	V40	l	∞	∞	366	∞	∞	∞
Harmonised standards applied	EN: 13203-2							
Specific precautions that shall be taken when the water heater is assembled, installed or maintained:	Before any assembly, installation or maintenance the installation and operation manual has to be read attentively and to be followed							

3 Installation

3.1 Introduction

3.1.1 The law requires that installation is carried out by a properly qualified person

Installations must be carried out in accordance with Gas safety (Installation and Use) Regulations 1998, Building Regulations, The Water Supply (Water Fittings) Regulations 1999 and any requirements of the local Gas Authority, Local Authority, Water and Fire Authorities and the current British Standards and Codes of Practice.

See
Listed in Section 1, General and Safety Information

The fittings pack supplied with the heater contains the items listed below.

1 - Installation and Service Manual.
1 - Coupler Socket ¾in BSP.
1 - Gas Cock.
1 - Drain Cock.
1 - Flue Adaptor Socket (Where required).
2 - Cap End 1½in BSP (Hiflo only).
2 - 1½in x 3in Nipples (32/143 Model only).

3.2 Assembling the draught diverter

The draught diverter must be assembled with the legs provided.

Attach the legs to the draught diverter with the nuts and bolts provided.

Fit the draught diverter (1) as shown in Fig.1 to the water heater using the screws provided. For Standard Range fit the draught diverter to the top of the water heater using the location holes.

In some cases, it may be necessary to drill the fixing holes in the top cover to fit the draught diverter to the water heater. By using the draught diverter as a template, position carefully over the flueway and mark the hole positions to be drilled 4mm.

Fit the adaptor socket (2) and seal into the draught diverter as shown in Fig. 1.

Fig. 1

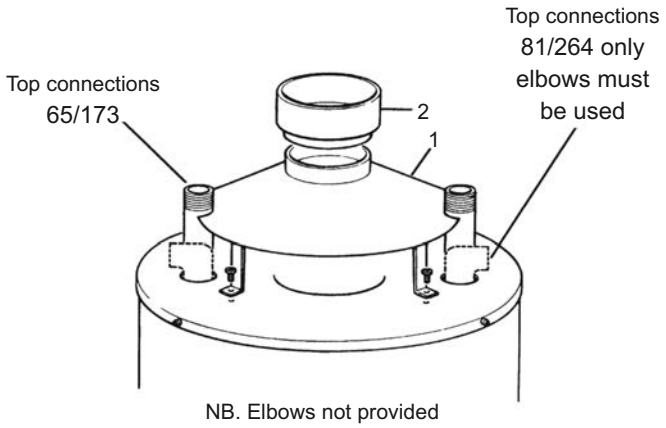

3.3 Location

The location selected for installation of the heater must allow the provision of a satisfactory flue, adequate air supply, drain facilities and must be well illuminated.

A purpose built boiler room or compartment is strongly recommended.

A manual valve for isolation of the boiler room should be installed in the gas supply; it should be clearly identified and readily accessible for use at all times.

If a purpose built boiler room is not available, measures should be taken to protect the heater from damage and prevent any extraneous matter from being stored on or around the heater.

See
See BS 6644 Clauses 4, 5 and 6 for details.

The heater must not be installed in any location which contains a bed, bath or shower.

There must be easy access to the boiler room and heater at all times.

A clearance of 800mm for Hiflo and 300mm for Standard Range should be left at the front of the heater for removal of the burner.

Clearances at the sides and rear of the heater should be at least 305mm.

Above service clearances for removal of the anodes and flue baffles should be provided as detailed below.

Standard Range	
Models 24/39, 32/40, 40/61	762mm
Model 63/62	1143mm
Model 84/87	1270mm

Hiflo Range	
Model 32/143	597mm
Model 81/264	1300mm
Models 65/173, 62/341, 54/418, 54/440	1143mm

The floor on which the heater is installed must be non-combustible, flat, level and of sufficient strength to withstand the weight of the heater filled with water and should satisfy the requirements of the Local Authority and Building Regulations.

See
see Section 2, Technical Data

Note
If the heater is in an exposed position and out of use during a period of heavy frost, it is recommended that the whole system is drained down to prevent damage due to the formation of ice inside the storage vessel.

3.4 Gas supply

Note
The Andrews Water Heaters Covered in this Manual Must Only be Used with Natural Gas.

The installation of the gas supply must conform, depending on it's size, to the requirements of British Standards and Codes of Practice.

See
Listed in Section 1, General and Safety Information

A gas meter will be connected to the service pipe by British Gas plc or it's authorised contractor.

The meter and service pipe should be checked by British Gas or it's authorised contractor to ensure that they are adequate to deal with the gas supply to the water heater(s) in addition to any existing or additional requirements.

Gas supply cock, standard models
Fit the gas supply cock immediately upstream of the gas control thermostat using a suitable jointing compound and connect to the gas supply. Do not apply heat in close proximity to the gas thermostat as damage to the control will result. A pressure test point nipple is fitted to the gas control thermostat at the gas inlet to test the incoming gas pressure.

Gas supply cock, Hiflo models
Fig. 2. Fit the gas cock immediately upstream of the gas control valve using a suitable jointing compound and connect to the gas supply. An inlet nipple complete with pressure test point nipple is factory fitted to the gas control valve to avoid possible damage.

Where the water heater(s) is(are) installed in a boiler house or purpose built compartment, a manually operated valve for the boiler house must be fitted in accordance with the Gas Safety (Installation and Use) Regulations 1998. The valve must be easily identified and readily accessible.

After installation, the system should be pressure tested for soundness and purged in accordance with BS 6891 or IM/2 and IM/5 as appropriate.

Fig. 2

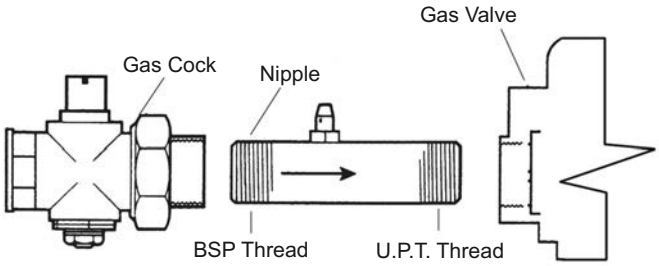

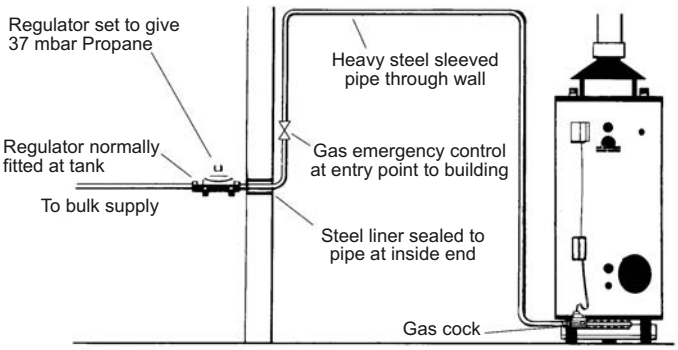

Bulk storage vessel installation

3.4.1 Installation of the LPG supply

Fig. 3. When using propane or butane cylinders connect a minimum number of cylinders as listed below, together with a manifold before connecting to the union.
Use a minimum pipe size of 3/4 in bore.

One cylinder	All Standard Range models
Two cylinders	HIflo models L32/143, L65/169, L81/251
Three cylinders	HIflo model L62/309
Four cylinders	HIflo model L54/399

WARNING!
Propane and Butane cylinders must be used and stored in accordance with 'The highly flammable liquids and liquified petroleum gases regulations 1972' and should comply with LPGA code of practice 7, 'Storage of full and empty LPG cylinders and cartidges'.

Fig. 3

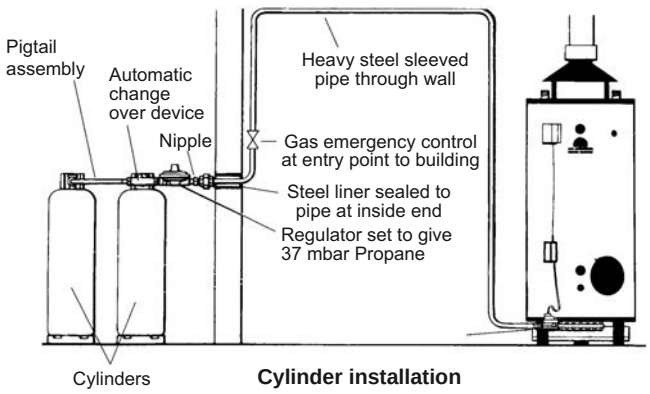

Cylinder installation

3.5 Electrical supply - Auto ignition units

3.5.1 Standard Range models - Hiflo models

External wiring to the water heater(s) must be installed in accordance with current I.E.E. Regulations for the wiring of buildings and to any Local Regulations that may apply.

The Auto Ignition Heater is designed to operate from a 220/240V, Single Phase supply. The fuse rating is 5 amps.

The method of connection to the mains electricity supply should facilitate complete electrical isolation of the appliance, preferably by use of an unswitched shuttered socket outlet in conjunction with a fused three pin plug, both complying with the requirements of BS 1363.

Alternatively, a fused double pole switch or fused spur box serving only the heater may be used.

The point of connection to the mains electricity supply should be readily accessible and adjacent to the appliance.

Fig 3a and 3b.
Connect the electrical supply to the main control panel terminal block via the cable glands in the base of the control panel. Mains input cable should be 0.75mm^2, 3 core, and should be connected to the mains supply as detailed above.

It is recommended that screen cable is used where the volt-free contacts are to be connected from an external supply. This will eliminate the risk of possible interference from nearby high voltage cables.

Data sheets available for Hiflo and Standard Range, Automatic Ignition Control System. Contact Andrews Water Heaters.

Fig. 3a

Standard Range

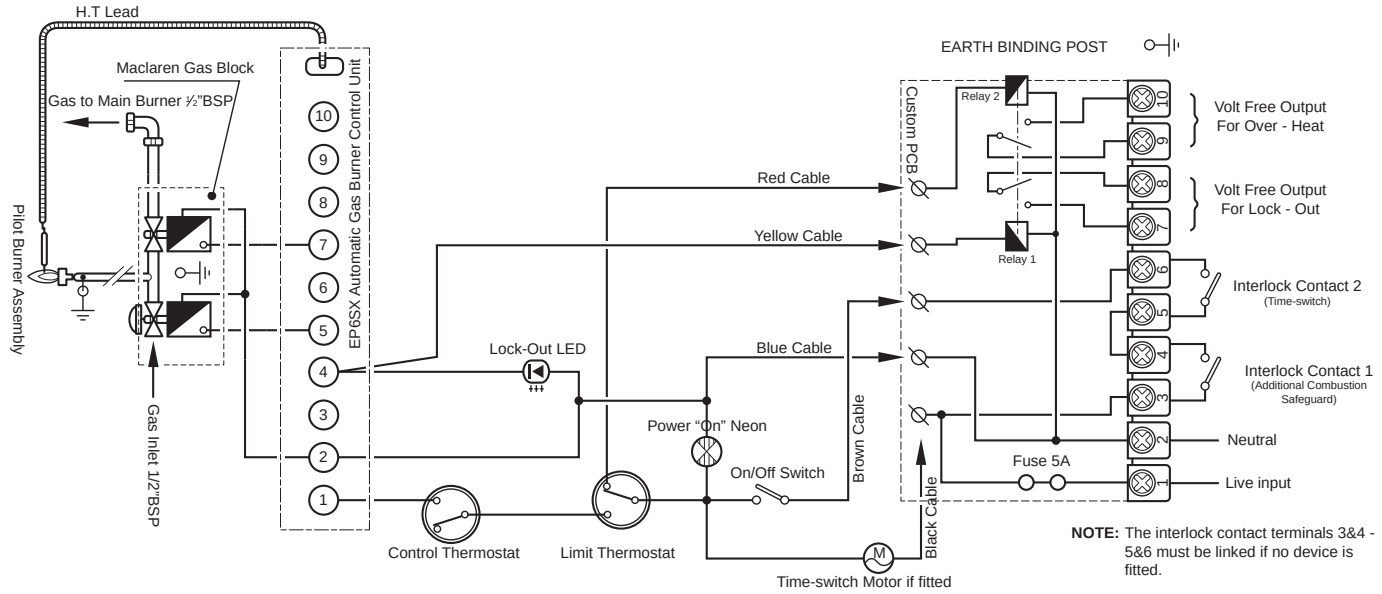

Fig. 3b

HIflo Range (Natural Gas only)

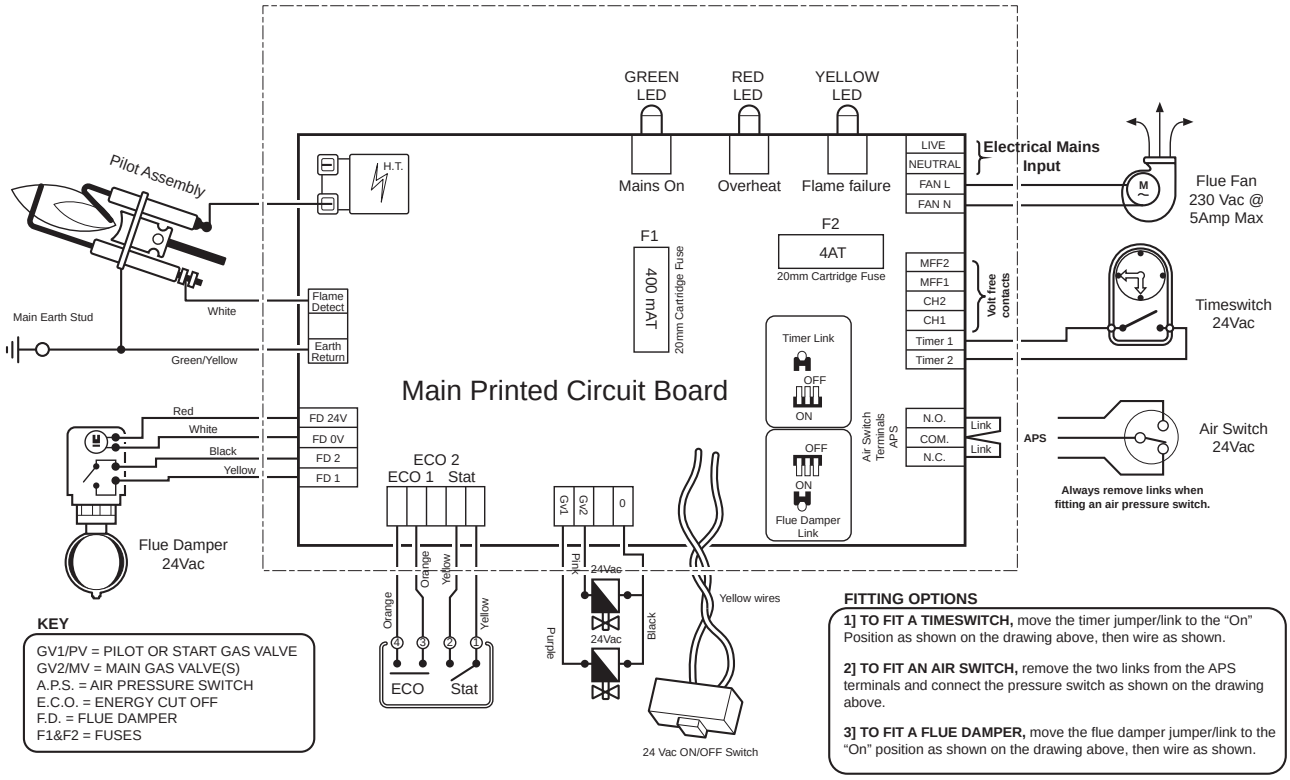

3.6 Flue systems

Detailed recommendations for flue installation are given in BS 6644, BS5440 Pt 1 and British Gas publication IM/11 - Flues for Commercial and Industrial Gas Fired Boilers and Air Heaters.

The flue connection is designed for BS 835 type heavy duty flue, but light quality flue pipe, mild steel or stainless steel sheet may be used using the appropriate adapter. Flue pipes etc. shall be fitted socket-up to keep any condensate within flue and appliance. Flues up to 200mm diameter should be fitted with a suitable British Gas Certified terminal.

Fig. 4a

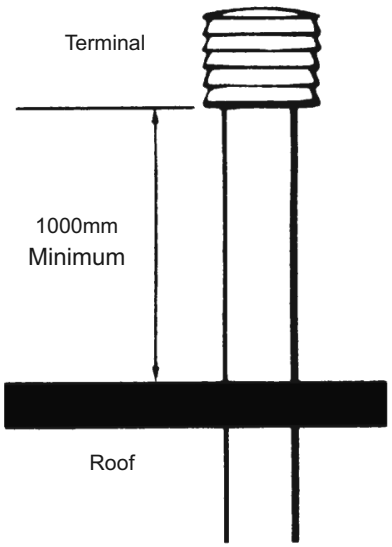

Fig 4a.
The terminal position is most important and must be at least 1000mm above roof surfaces or at least 600mm above any parapet and clear of any adjacent obstruction as well as being clear of any openable windows, ventilators or features which could allow re-entry of flue products into the building. Pressure areas should also be avoided to prevent blowdown.

See
See recommendations in BS 6644. BS 5440 Part 1 also provides useful additional advice.

Flue materials, including jointing materials and fittings shall be asbestos-free, robust, durable, corrosion resistant and non-combustible and shall comply with BS 5854 and BS 715 or BS 4076 as appropriate, as well as being of a type accepted by the Local Gas Authority.

When passing up through or adjacent to combustible materials, measures shall be taken to prevent the temperature of the combustible material from exceeding 60°C. The flue shall not be closer than 50mm to any combustible material except when passing through, when it must be enclosed by a non-combustible sleeve and separated from the sleeve by not less than 25mm air space.

Flues shall be of a size not less than specified in Section 2, Technical Data (i.e. nominal flue size) and fitted so that there is no risk to persons in the building or from accidental damage.

Fig. 4b

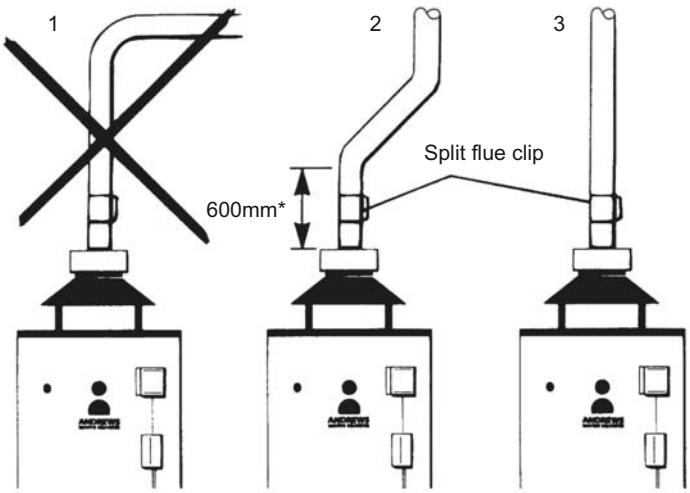

1. This flue run must not be used

2 & 3 are recommended flue runs

Fig 4b.
If using an existing brick chimney, it should be swept and lined and checked for soundness before connecting the flue and should take the shortest possible route and rise continuously to the terminal avoiding the use of 90° bends where a change of direction is required. Horizontal and very shallow runs of flue should be avoided since they impede the flow of gases and increase local cooling.

*A minimum of 600mm of vertical flue directly above the draught diverter should be provided where possible on all natural draught flue installations. If this dimension cannot be achieved please contact Andrews Water Heaters.

Note
Please note this is not required where a common flue header is used on multiple installations.

Fig. 5

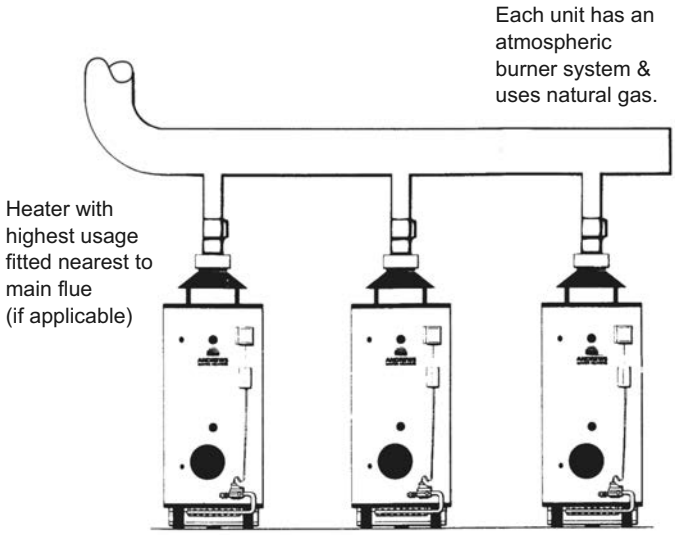

Fig 5.
Common flues may be used on multiple installations only if all the heaters are of the same burner system and fuel type and should be sized to ensure complete evacuation of the flue products from the installation.

Where one flue is to be used more regularly or for longer periods than the others in the group, it should be connected at the point nearest to the main flue.

See
See BS 6644 Clause 20 for further information and recommendations on this as well as general flue requirements.

Fit a flue clip or flange joint close to the diverter so that it is secure but can be disconnected for servicing. The weight of the flue must be borne by securing clips, etc. and not by the heater.

Minimum Heights from Roof to Base of Flue Terminal						
Type of Roof		Not within 1.5m of a vertical surface of a structure = on the roof			Within 1.5m of a vertical surface of a structure = on the roof	
		Internal Route		External Route	Internal Route	External Route
		On Ridge	Not on Ridge			
Pitched	Pitch exceeding 45°	At or above ridge level	1m above roof intersection	1m above roof intersection	The base of the terminal should be 600mm above the level of the adjacent roof edge	
	Pitch not exceeding 45°		600mm above roof intersection	The base of the terminal should be 600mm above the level of the adjacent roof edge		
Flat	With parapet	Not applicable	600mm above roof intersection			
	Without parapet		250mm above roof intersection			

3.7 Air supply and ventilation

See
For all installations, please refer to the table below for calculating requirements. Detailed recommendations for the air supply are given in BS 5440 Part 2, BS 6644 Clause 19 and IGE/UP/10 Pt.1.

Note
The following notes are provided for general guidance only.

Ventilation shall prevent the heater environment from exceeding 32°C.
The purpose provided space in which the heater(s) are installed must have permanent air vents communicating directly with the outside air, at high and low level. Where communication with the outside air is possible only by means of high level air vents, ducting down to floor level for the lower vents must be used.
For an exposed building, air vents must be fitted on at least two sides, preferably on all four sides.

Air vents should have negligible resistance and must not be sited in any position where they are likely to- be easily blocked or flooded, or in any position adjacent to an extraction system which is carrying flammable vapour.

Grilles or louvers should be so designed that high velocity air streams do not occur within the space housing the heater(s).

The grilles should have a total minimum free area for the water heater(s) in addition to any other requirements as follows:-

Where the heater is to be installed in a room the following permanent ventilation is required:

5cm^2 per kW in excess of 7kW net for installations up to 54kW net.

For installations exceeding 60kW the following permanent ventilation is required:

Low Level (inlet) 540cm^2 plus 5cm^2 per kilowatt in excess of 54kW total net input.

High Level (outlet) 270cm^2 plus 2.5cm^2 per kilowatt in excess of 54kW total net input.

Where the heater is to be installed in a compartment, permanent air vents are required in the compartment at high and low level. These air vents must either communicate with a room or internal space or be direct to outside air.

The minimum effective areas of the permanent air vents required in the compartment are as follows;-.

	Air Vent Areas	
Position of Air Vents	Air from room or internal space	Air direct from outside
High Level	10cm^2 per kW net	5cm^2 per kW net
Low Level	20cm^2 per kW net	10cm^2 per kW net

Note
Both air vents must communicate with the same room or internal space or must both be on the same wall to outside air.

1. The effective area requirements specified in the table are related to the maximum net input of the heater(s) and are equivalent to those specified in BS 6644 and IGE/UP/10 Pt.1.

2. The free area of the grilles should not be less than the size of the recommended ventilation opening.

3. The supply of air to a space housing the heater(s) by mechanical means should be: (a) Mechanical inlet with natural extraction. (b) Mechanical inlet with mechanical extraction.

Natural inlet with mechanical extraction must not be used.

Where a mechanical inlet and mechanical extraction system is used, the design extraction rate must not exceed one third of the design inlet rate.

All mechanical ventilation systems must be fitted with automatic gas shut off safety systems which cut off the supply of gas to the heater(s) in the event of failure of either the inlet or extract fans.

The requirements for air supply by mechanical ventilation are given in BS 6644 Clause 19.3. and IGE/UP/10 Pt.1.

The permanent air vents shall be sited away from any extract fans. Where an extract fan is fitted, check for spillage at the draught diverter as detailed in BS 5440 Part 1 Appendix B. It may be necessary to increase the ventilation area to compensate for the extract fan.

4. The vapours emitted by halogen based compounds can, if drawn into the combustion air, cause corrosion of the gas burner, thermocouple and storage vessel. Therefore, if heaters are to be installed in locations where halogens are likely to be present, they should be isolated from such compounds and ventilated from and to outside uncontaminated atmosphere.

Some of the vulnerable areas are:
(a) Hairdressing salons and adjoining rooms and basements
(b) Establishments where dry cleaning solutions are used or stored.
(c) Degreasing plants using hydrocarbon solvents.
(d) Premises where refrigerant gases are used or stored.

3.8 Water quality and treatment

Where extreme conditions of water hardness exist, scale can form in any water heating equipment, especially when the heater is working under conditions of constant heavy demand and at high temperatures.

Each water heater is fitted with one or more magnesium anode(s) which protect the tank from corrosion caused by electrolytic action. Magnesium anodes are sacrificial in that they corrode as they protect. When the anode has eroded to less than 50% of it's original diameter, it may not offer protection.The anodes should be inspected annually and replaced as necessary. Frequency of anode replacement will vary dependent on water quality.

Andrews Water Heaters offer Correx™ UP powered anodes as an alternative to the standard magnesium anodes. These anodes do not need maintenance or replacement. The potentiostat which regulates the current to the Correx™ anode, features an indicator light which shows green to indicate correct function and red to indicate malfunction. An additional Correx™ BEMS version is available, which provides a remote warning signal.
These anodes are available as an optional extra on all Andrews heaters.

In hard water areas, scale formation can occur in hot water systems and hot water heaters and the higher the temperature and volume of water used, the more problematic the scale build-up can be. Water treatment is normally recommended when the hardness reaches 100 - 150ppm (7 - 10 degrees Clark) and above. This problem can be minimised by reducing the water temperature in the heater and by fitting suitable water pre-treatment equipment.

Note
When installing Andrews Water Heaters in hard water areas we would recommend that a water treatment specialist is consulted.

The following companies have supplied water treatment equipment in the UK for a number of years to various establishments including those where Andrews water heaters have been installed.

Failure to provide and maintain appropriate water treatment will invalidate warranty.

WARD (Saffron Walden)
Unit 3
Concord Farm
School Road
Rayne
Essex
CM77 6SP

Tel: 01376 559670
Fax: 01376 340004

SENTINEL PERFORMANCE SOLUTIONS LTD
7650 Daresbury Park
Daresbury
Warrington
Cheshire
WA4 4BS

Tel: 01928 704330
Fax: 01928 562070

www.sentinelproducts.com

HYDROTEC UK LTD
Hydrotec House
5 Manor Courtyard
Hughenden Avenue
High Wycombe
Bucks HP13 5RE

Tel: +44 (0)1494 796040
Fax: +44(0)1494 796049

www.hydrotec.co.uk

3.9 Water connections

Fig. 6a

Hydrojet System

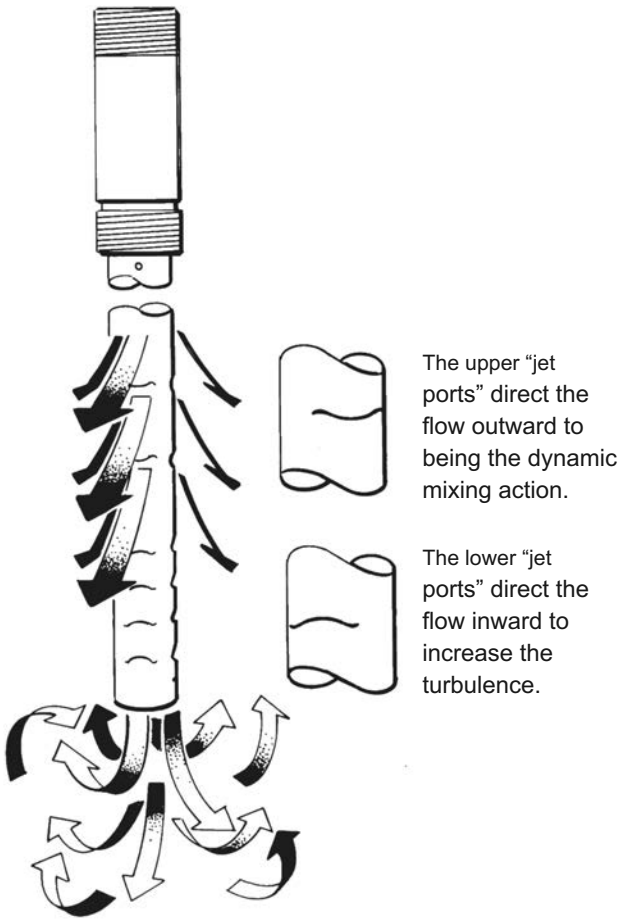

Fig. 6b

Mini Hydrojet Inlet Nipple
(Side Cold Inlet Connection)

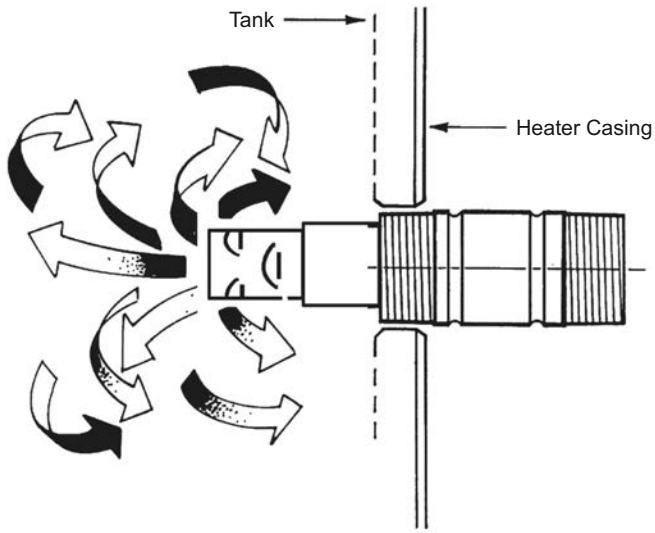

All models now incorporate the new Mini Hydrojet system on cold inlet side connections.

This system ensures water is directed onto the tank base which minimises sediment build up from day one of installation.

3.9.1 Hydrojet system

The heater is fitted with the Hydrojet Total Performance System incorporated in the cold inlet dip tube. The tube is designed to increase turbulence and reduce sediment build up, reduce thermal stacking and increase delivery.

Fig. 7

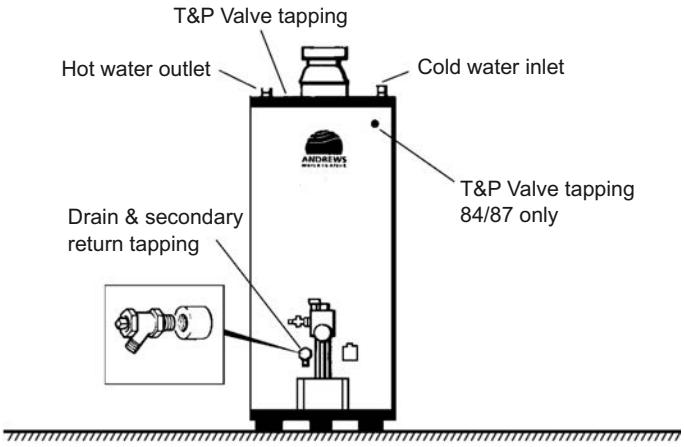

All connection sizes are shown on page 4

Fig. 8

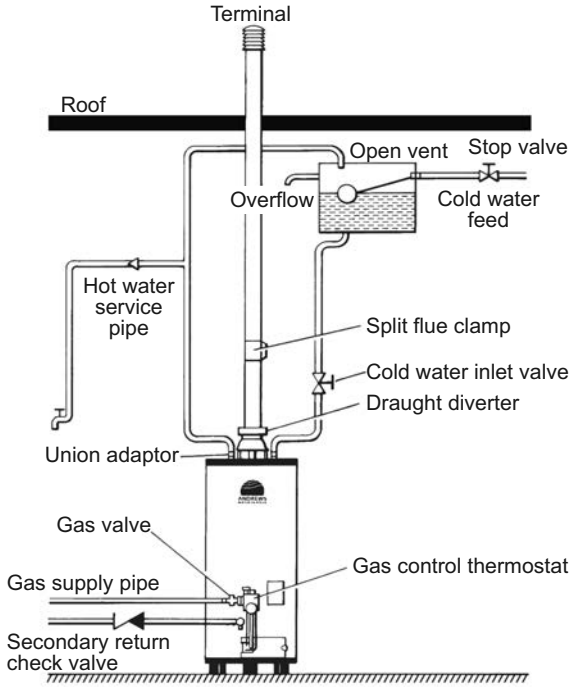

Fig. 9

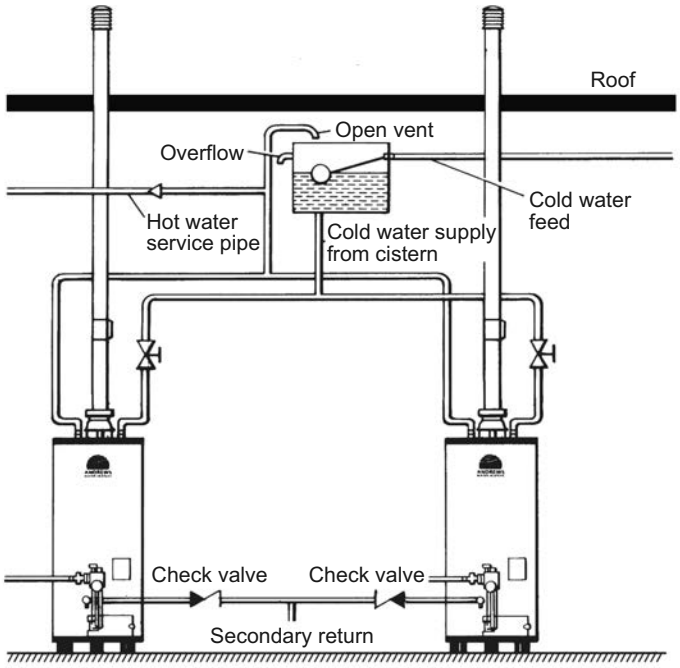

3.9.2 Vented systems, Standard Range

The water heater must be supplied from a cold water feed cistern and the hot water supply pipe must be fitted with an open vent pipe in accordance with BS 5546 and BS 6644.

The Water Supply (Water Fittings) Regulations 1999 must be observed when installing the system.

The cold water feed cistern must have an actual capacity greater than the hourly recovery rate of the heater or heaters to which it is fitted, the minimum actual capacity allowed for a feed cistern being 227 litres.

The actual cistern capacity is the capacity to the normal water line of the cistern.

All cisterns should be manufactured to the relevant British Standard.

The distance from the normal water line to the top of the cistern should comply with that specified by the Water Authorities.

The cold water inlet and hot water outlet connection nipples are identified on top of the heater. Remove nipples and re-make prior to installation.

Connect the cold water feed and hot water outlet to these nipples with union adaptors for ease of servicing.

Caution
Do not apply heat to these nipples if making capillary soldered joints as they are fitted with plastic inserts. Make the capillary joints to the pipes before connecting to the heater. A drain cock is supplied with the heater and this should be fitted to the appropriate boss as shown on the drawing Fig. 7.

After installation of the water system, open the main water supply valve, flush the system and fill the heater.

Open the hot taps to allow air to escape from the system.

When the water is free of air, close the taps and check for leaks at the gas control thermostat, drain cock and the pipe connections at the top of the heater.

All water connections for Standard Range are shown in Fig 7.

Typical water service layout for Standard Range single heater vented system is shown in Fig. 8.

Typical water service layout for Standard Range multiple heater vented system is shown in Fig. 9.

3.9.3 Correx powered anodes

Fitting and Operation Instructions

Please note that the new HIflo Auto ignition range has Correx anodes fitted as standard.

THE INTRODUCTION OF THIS KIT HAS THREE MAIN ADVANTAGES TO BE CONSIDERED

a) LOW MAINTENANCE COSTS (Correx is non sacrificial, therefore no anode maintenance is needed).

b) LOW RUNNING COSTS – LESS THAN 35kWH PER YEAR.

c) BETTER PROTECTION PARTICULARLY IN AREAS OF LOW ELECTRICAL CONDUCTIVITY.

Wiring external to the water heater must be installed in accordance with the I.E.E. Regulations for the wiring of buildings and to any local regulations that may apply.

This kit is designed to run off 220/240V 1ph 50Hz permanent supply and the fuse rating is 3Amp.

The method of connection to the mains electricity supply should facilitate complete electrical isolation of the appliance preferably by use of an unswitched shuttered socket outlet in conjunction with a fused three pin plug both complying with requirements of BS1363/A.

Alternatively a fused double pole switch or fused spur box serving only the heater may be used.

The point of connection to the mains should be readily accessible and adjacent to the appliance.

3.9.4 To install the kit

1. Drain down water heater.

2. Remove cold inlet hydrojet nipple and replace with 1½ nipple supplied in fittings pack.

3. Fit correx anodes into front hot and cold water connections using tees and bushes. If top water connections of heater are to be used (dependent on model type) cap off front connections with blanking caps.

Note
leave existing magnesium anodes in position.

4. Fix potentiostat to heater casing, using retaining bracket.

5. Connect output leads onto anode connections. Cut leads to required length and use two spade connectors provided.

6. Fit earth strap to 1½BSP sq.tee optional hot outlet connection. Connect earth return at this point. Cut lead to required length and use spade terminal provided.

7. Connect potentiostat mains input cable to a permanent 240V electrical supply via an unswitched spur outlet (fuse rating 3 Amps).

3.9.5 Test the installation

1. Refill the water heater and check for leaks.

2. Switch on electrical supply to correx powered anode.

3. The green control lamp on the potentiostat indicates that the installation is functioning correctly.

4. The red control lamp on the potentiostat indicates a fault. Switch off electrical supply before any repair work is carried out.

The installation is now complete.

3.9.6 Unvented systems, standard range

Unvented Systems should be fitted by an Approved Installer

When used in an unvented system, the Andrews Water Heater will supply hot water at a pressure of 3.5bar provided that this pressure is available at the mains feed. During conditions of no-flow, system pressure may rise to a maximum of 6bar whilst the burner is operating. When testing the system, it is recommended that a maximum test pressure of 8bar is employed.

Fig. 10

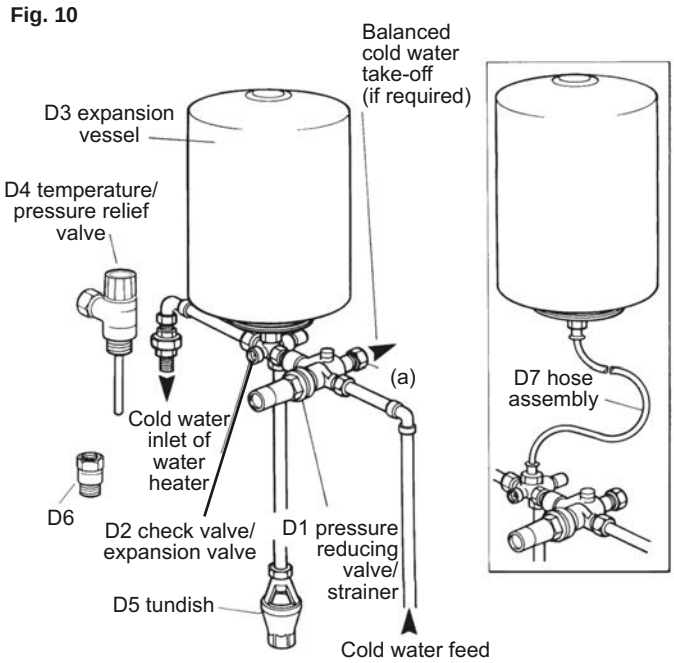

Fig. 10
The heater can be used on unvented hot water storage systems, with the addition of an Unvented Systems Kit, part number B171 available from Andrews Water Heaters.

See
See Parts List Page 56. The Wall Mounting Kit is available as an optional extra.

Item D4 must be fitted into the temperature relief port in the water heater tank. D6 Adaptor - For use with D4 on heater models 40/61 63/62 & 84/87.
When assembling items D1 and D2, ensure that the flow arrows marked on the components are pointing in the direction of flow i.e. towards the water heater.

The cold water for services may be drawn from the 22mm compression port on item D1 (a). The water pressure at this point will be similar to that available at the hot water outlet of the water heater. If port (a) is not used, it should be sealed with the blanking plug supplied.

If higher flow rates are required for the cold water services, a suitable tee fitting should be fitted to the pipework, upstream of item D1.

Fig. 11

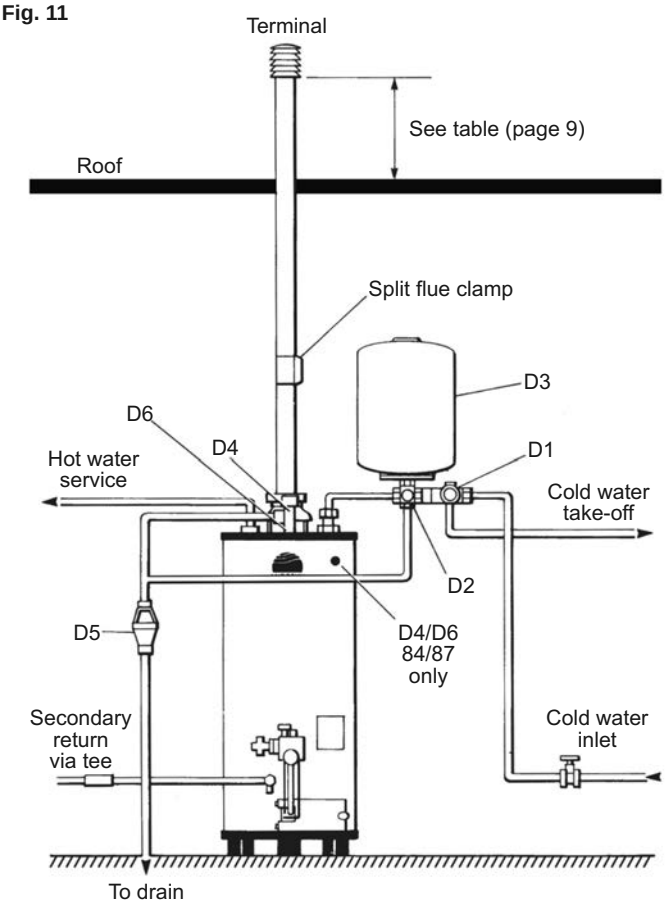

The pipework fitted to the tundish outlet should be at least 28mm diameter and should be terminated at a suitable drain (see Building Regulations Approved Document G3).

All fittings and materials must be suitable for use with drinking water and listed in the current Water Research Centre "Materials and Fittings Directory".

Installation of unvented hot storage water systems must comply with Part G of Schedule 1 of the Building Regulations.

Typical water service layout for Standard Range single heater unvented system is shown in Fig 11.

Typical water service layout for Standard Range multiple heater unvented system is shown in Fig 12.

Fig. 12

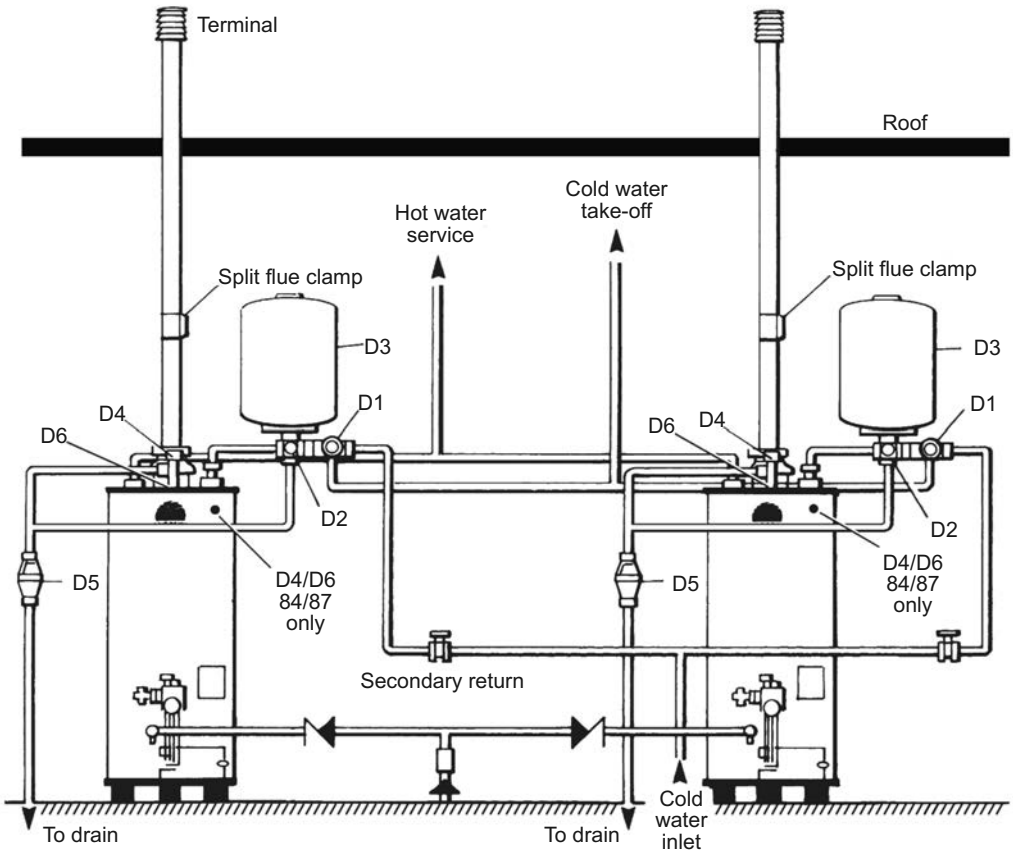

3.9.7 Vented systems, HIflo Range

The water heater must be fed from a cold water feed cistern or static water tank.

Note
A safety valve must be fitted as specified in BS 6644 Clause 9.

The safety valve must be fitted either directly to an upper tank tapping or not further than 1 metre along the outlet flow pipe of size not less than the safety valve.

There must be no valve separating the heater from the safety valve.

The size of the discharge pipe must be not less than the nominal size of the safety valve outlet. It should be self-draining and any water discharged must be visible and create no hazard to persons in or about the building.

A low pressure open vented system can be used or where the natural circulating pressure is insufficient, pumped circulation can be employed.

The heater must be fitted with an open vent pipe which is not valved and which rises continuously to the open vent. It should be sized with reference to Technical Data, BS 6644 Clauses 9 and 10 and CP 342. Local Regulations and Bye-Laws must be observed when installing the system.

Water draw-off dead legs should comply with CP 342 Part 2, Table 1 and BS 6700.

Fig. 13
Models 65/173, 81/264. Optional top inlet/outlet water connections
Select the cold/hot location required (i.e. top inlet/outlet or front inlet/outlet) and, using a suitable jointing compound, blank off the two ports not required.

All Models. Front inlet/outlet water connections
Models 32/143. Optional rear inlet/outlet water connections
Assemble onto the 3/4 BSP thread, the 3/4 BSP coupler socket (1) and drain cock using a suitable jointing compound. Select the Cold/Hot location required and using a suitable jointing compound, blank off the two ports not required.

Models 32/143, 62/341, 54/418, 54/440
A 3/4 BSP thread connection is available at the top of the heater, this is suitable for a Automatic Air Vent if required (Not supplied).

Note
When using a secondary return circuit, see Fig 13 for the locations of the return tappings.

It is recommended that all water connections be made to the heater(s) using union fittings for ease of servicing. Pipe support intervals should comply with CP 342, Part 2 Table 4.

After Installation of the water system, open the main water supply valve, flush the system and fill the heater. Open the hot taps to allow air to escape from the system. When the system is free of air, close the taps and check for leaks at the gas control thermostats, drain cock and pipe connections on the heater.

Typical water service layout for HIflo Range single heater vented system is shown in Fig 14.

Typical water service layouts for HIflo Range multiple heater vented systems are shown in Figs 15 and 16.

Fig. 13

All connection sizes are shown on page 5

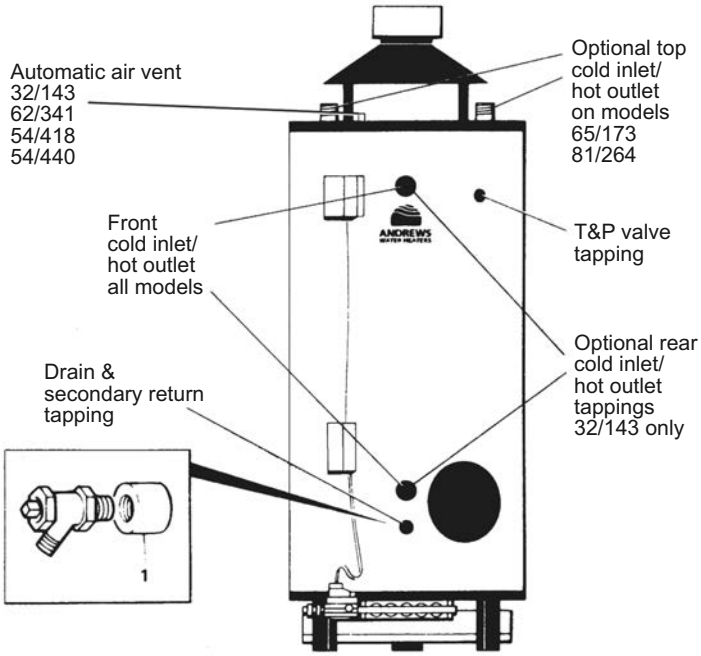

Fig. 14

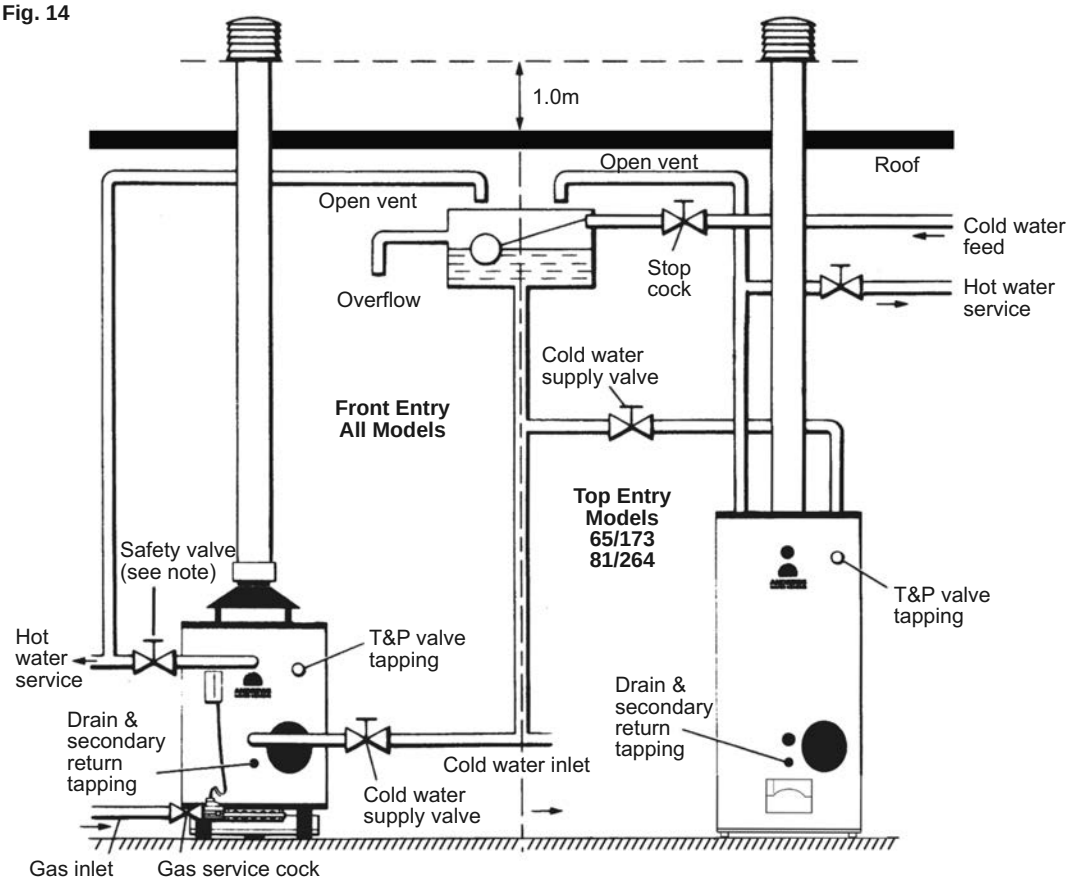

Fig. 15

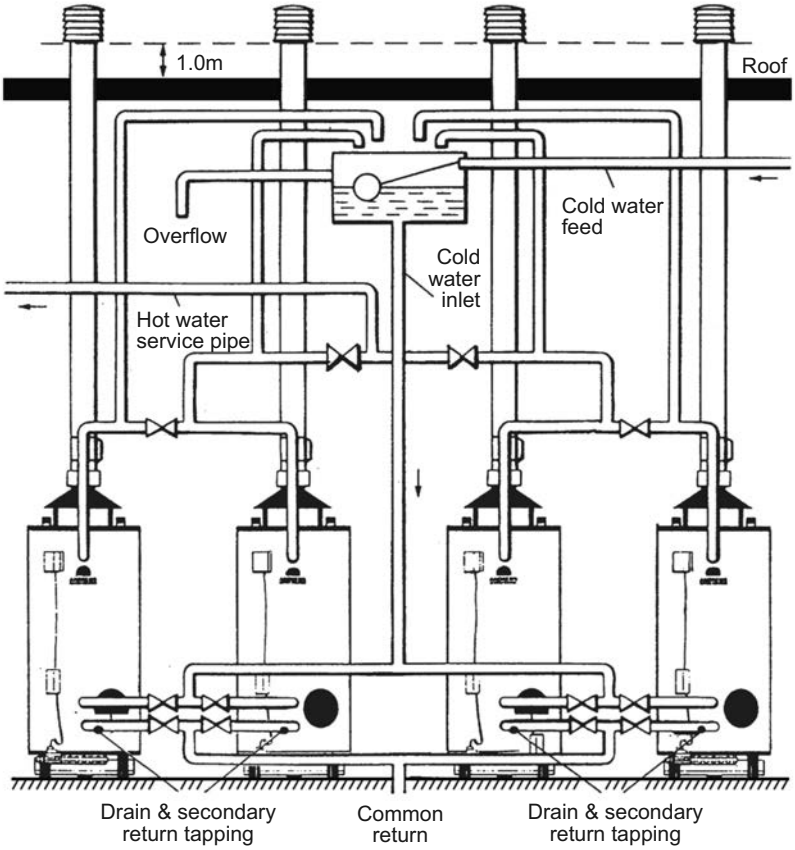
1.0m
Roof
Cold water feed
Overflow
Cold water inlet
Hot water service pipe
Drain & secondary return tapping
Common return
Drain & secondary return tapping

Fig. 16

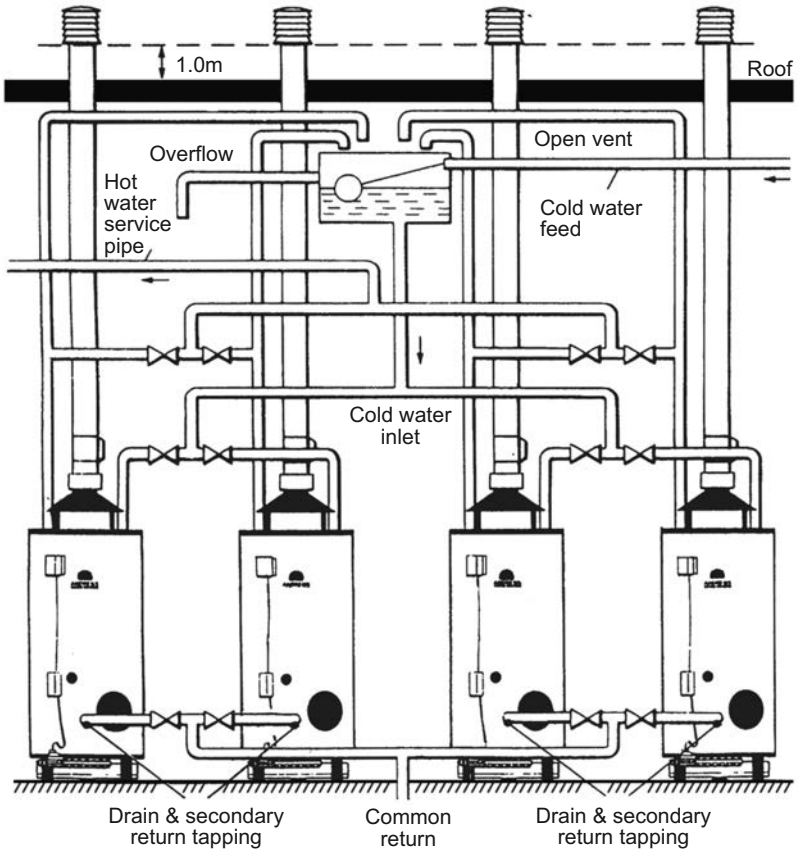
1.0m
Roof
Open vent
Overflow
Hot water service pipe
Cold water feed
Cold water inlet
Drain & secondary return tapping
Common return
Drain & secondary return tapping

Fig. 17

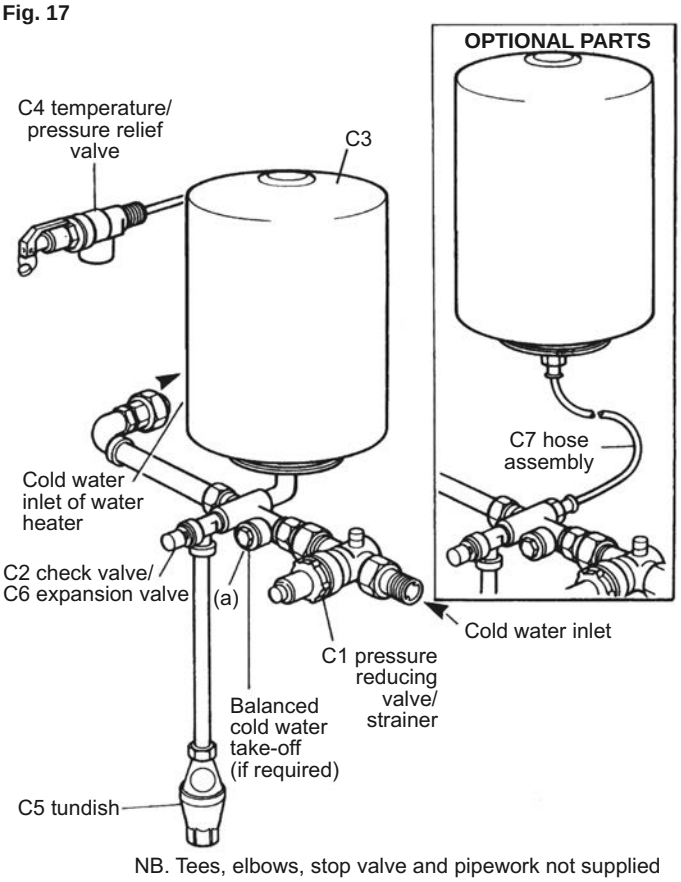

Fig. 18

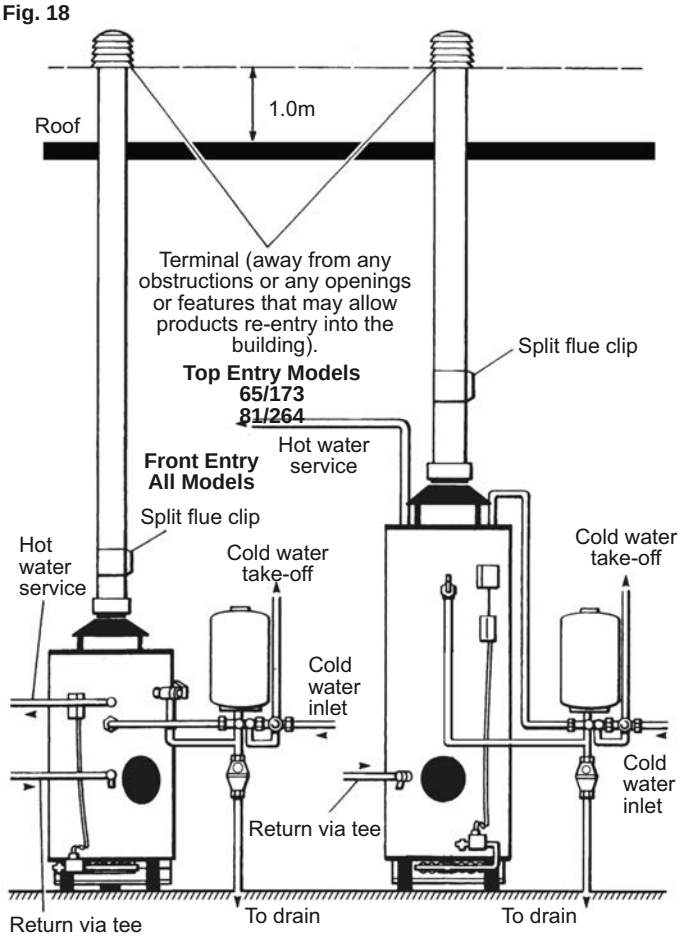

3.9.8 Unvented systems, HIflo range

Unvented Systems should be fitted by an Approved Installer

When used in an unvented system, the Andrews Water Heater will supply hot water at a pressure of 3.5bar provided that this pressure is available at the mains feed. During conditions of no-flow, system pressure may rise to a maximum of 6bar whilst the burner is operating. When testing the system, it is recommended that a maximum test pressure of 8bar is employed.

Fig. 17
The heater can be used on unvented hot water storage systems, with the addition of an Unvented Systems Kit, part number B290 available from Andrews Water Heaters.

See
See Parts List Page 60. The Wall Mounting Assembly is available as an optional extra.

Item C4 must be fitted into the temperature relief port in the water heater tank.

When assembling items C1 and C2, ensure that the flow arrows marked on the components are pointing in the direction of flow i.e. towards the water heater.

The cold water for services may be drawn from the 22mm compression port on item C1 (a). The water pressure at this point will be similar to that available at the hot water outlet of the water heater. If port (a) is not used, it should be sealed with the blanking plug supplied.

If higher flow rates are required for the cold water services, a suitable tee fitting should be fitted to the pipework, upstream of item C1.

The pipework fitted to the tundish outlet should be at least 28mm diameter and should be terminated at a suitable drain.

See
See Building Regulations 1991 Approved Document G3.

All fittings and materials must be suitable for use with drinking water and listed in the current Water Research Centre "Materials and Fittings Directory".

Installation of unvented hot storage water systems must comply with Part G of Schedule 1 of the Building Regulations.

Typical water service layout for HIflo Range single heater unvented system is shown in Fig 18.

Typical water service layouts for HIflo Range multiple heater unvented systems are shown in Figs 19 and 20.

Fig. 19

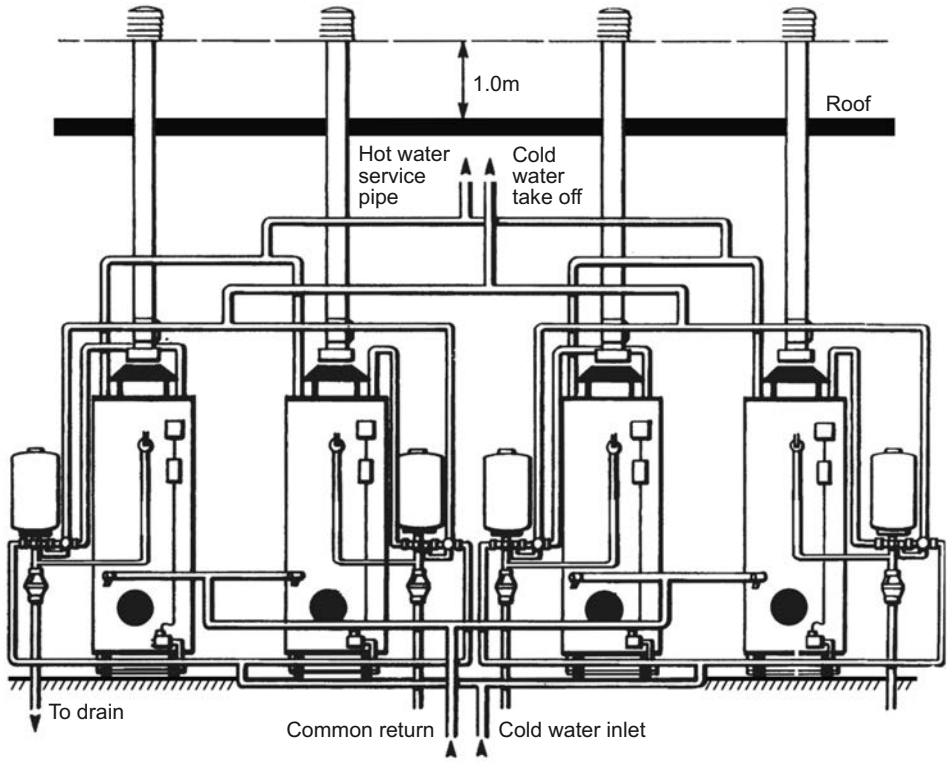
1.0m
Roof
Hot water service pipe
Cold water take off
To drain
Common return
Cold water inlet

Fig. 20

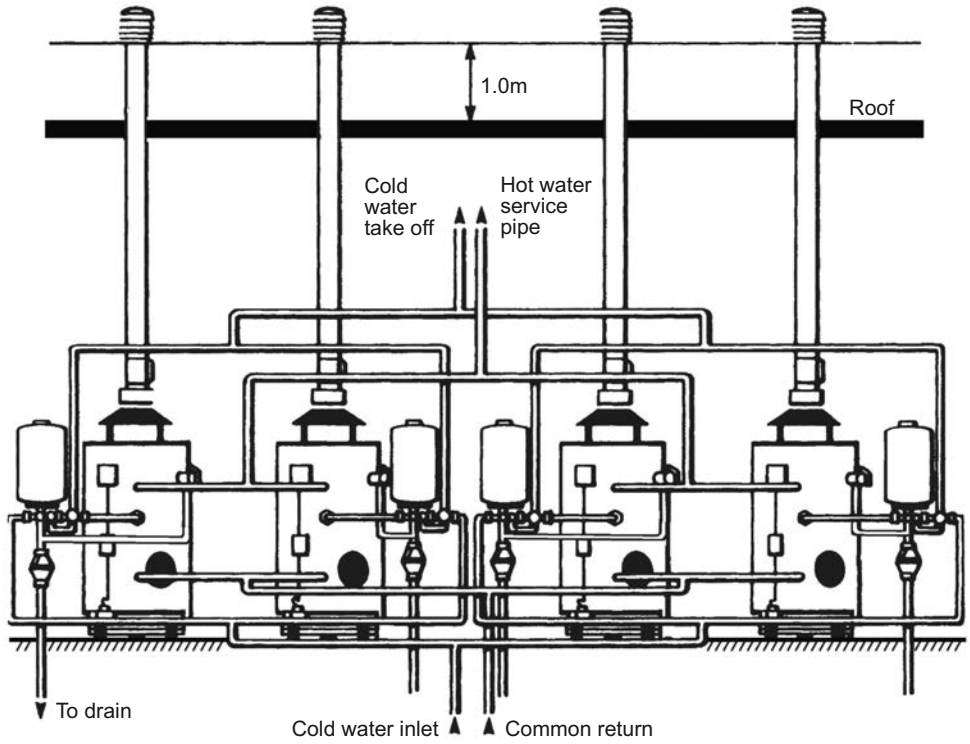
1.0m
Roof
Cold water take off
Hot water service pipe
To drain
Cold water inlet
Common return

4 Commissioning

4.1 Standard range permanent pilot models

Fig. 21

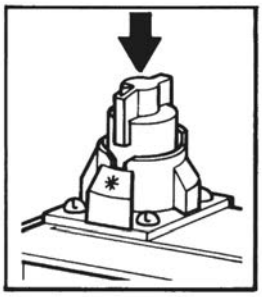

Note European Symbols:

OFF :
PILOT :
ON :

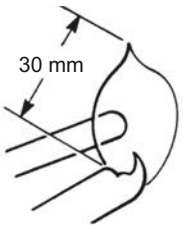

Correct size and shape of the pilot flame

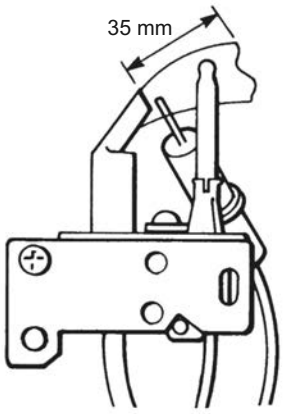

84/87 only correct size and shape of the pilot flame

4.1.1 Lighting the burner

Caution
Do not operate the water heater until the storage vessel is completely filled with water, with water running from all hot taps.

Open the main gas supply cock after all connections to the gas control are completed and test all connections, using proprietary leak detection fluid.

1. Remove outer cover and slide inner cover to right. (On 63/62 and 84/87 Models, raise the inspection port cover). Wait for 3 minutes for any unburnt gas to vent.

2. Turn the gas control knob to pilot.

3. Fully depress the gas control knob and the piezo igniter. With the pilot burner alight, hold gas control knob in for 20 seconds. When gas control knob is released, the pilot should remain lit. If not, repeat this operation.

4. Close and refit covers.

5. Set temperature indication dial to required temperature as follows:

Setting	0	1	2	3
Approx. Water Temperature	40°C	52°C	62°C	71°C

6. Turn the gas control knob to ON and the burner should light. If not, wait for at least 3 minutes and repeat from step 1.

4.1.2 Shutting Off The Burner

For long periods only (7 days or more) turn gas control knob to PILOT, depress slightly and turn clockwise to OFF. Turn off the gas service cock. For shorter periods, leave the heater under thermostat control.

Note
If the pilot goes out for any reason, turn off heater and wait for 3 minutes before relighting.

4.1.3 Checking main burner pressure

Fig. 22

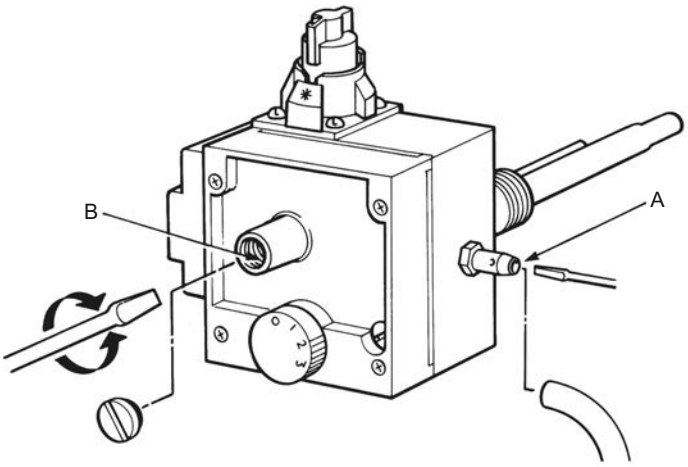

1. Turn burner OFF as above.
2. Remove brass cap from pressure adjustment port.
3. Release bleed screw A one turn and connect pressure gauge tube.
4. Light burner according to the preceding instructions.
5. Adjust burner pressure at screw B in accordance with data plate.
6. Turn screw clockwise to increase pressure and counterclockwise to decrease.
7. Turn burner OFF as described above. Remove pressure gauge tube and tighten screw A.
8. Refit brass cap to pressure adjustment port.

4.2 HIflo Range permanent pilot models

4.2.1 Lighting the burner

Open the main gas supply cock after all connections to the gas control are completed and test all connections using a manometer. Purge air from pipework and ensure there are no loose connections to burner or pilot pipe.

Note
The gas control will be damaged if inlet pressure exceeds 35mbar.

Fig. 23

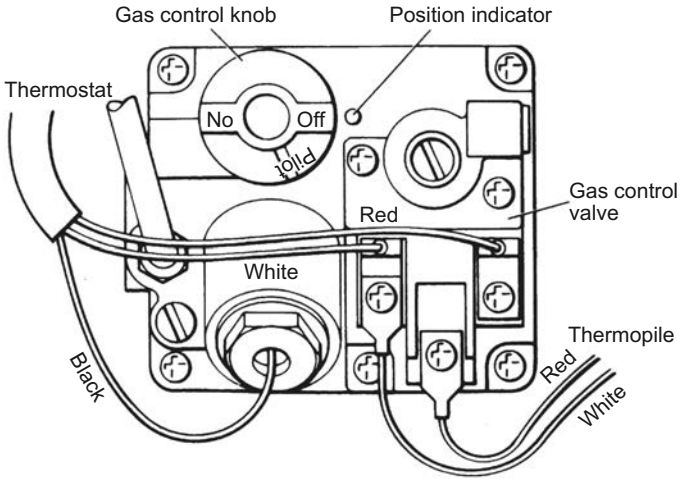

1. Ensure gas supply is on.
2. Turn gas control knob to PILOT position.
3. Depress knob and activate piezo igniter.
4. Keep knob pressed in for a further 40 seconds after pilot lights, then release knob and check that pilot remains lit. If not, turn off then wait 3 minutes before repeating from step 2. Observe via the view port.
5. Turn control knob to ON and turn control thermostat dial to required water temperature. The burner will now light.
6. Check pilot and gas connections for soundness with leak detection fluid whilst burner is alight. Turn off, seal any leakages, then re-test.

Warning
if pilot goes out, do not attempt to relight gas until at least 3 minutes have elapsed. If gas supply has been interrupted and immediately reconnected, unburnt gas will pass into the combustion chamber due to operation of the thermopile. Do not attempt to re-light for at least 5 minutes to allow unburnt gas to disperse. Ventilate the area if possible.

Fig. 24

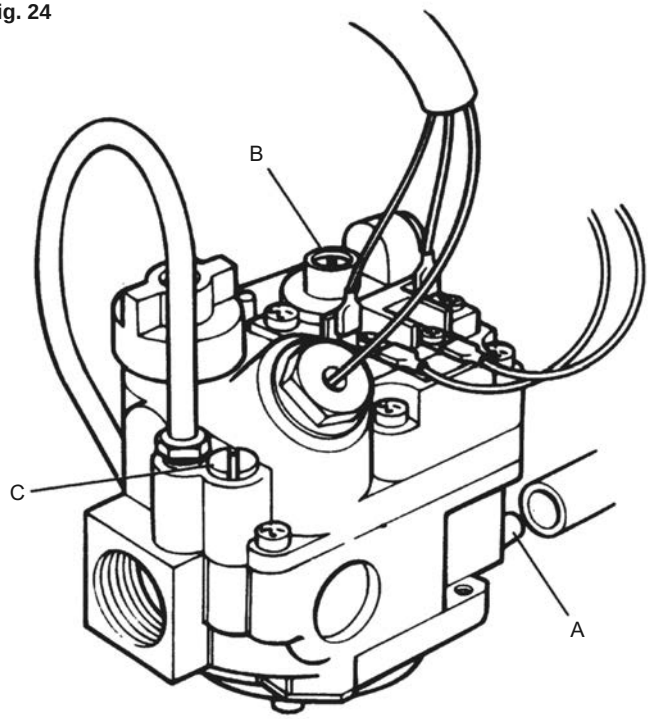

Fig. 25

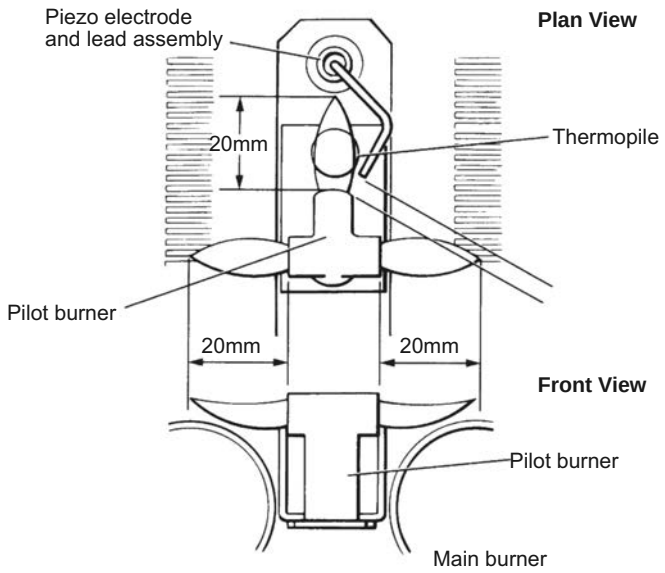

4.2.2 Shutting off the burner

For long periods only, (7 days or more) turn control knob to PILOT, partially depress knob, then turn clockwise to OFF. Turn off gas service cock. For shorter periods leave heater under thermostat control.

4.2.3 Checking main burner pressure

1. Turn gas control knob to OFF.
2. Release bleed screw A and connect pressure gauge tube.
3. Light burner as described above.
4. Remove valve cap from port B and adjust pressure using exposed screw in accordance with data plate.
5. Turn screw clockwise to increase pressure and counterclockwise to decrease. If possible, check gas rate

See
(see Technical Data) with meter and watch. Refit valve cap to port B.

6. Turn gas control to PILOT. Remove pressure gauge tube and tighten bleed screw A.
7. Turn gas control knob to ON and light burner as described above.

4.2.4 Check correct shape and size of pilot flame

No adjustment is provided for the pilot. The restrictor C on the gas control (see Fig. 24) should be turned fully counterclockwise to the fully open position.

When viewed from the front of the heater, the pilot flame should appear as shown in Fig. 25

4.2.5 Checking for Spillage at the draught diverter

If an extract fan is fitted, carry out a spillage check as set out in BS 5440 Part 1, Appendix B. If spillage does occur, increase the ventilation area until the products clear well. If an openable window is in the boiler house or room containing the heater(s), turn on the extract fan and heater(s). Open the window fully, and, using a stiff card, gradually reduce the opening until the appliance(s) just spills. Then increase the opening until the products clear well. Measure the opening for the additional area required.

4.3 Standard Range Auto ignition models

Fig. 26

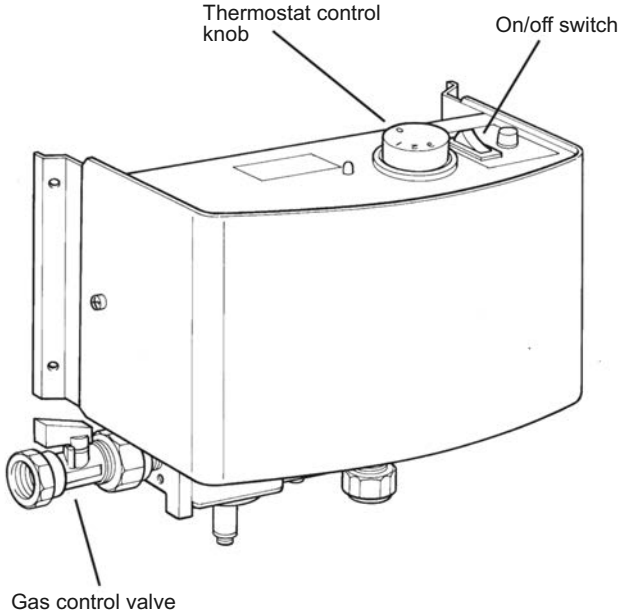

4.3.1 Lighting the burner

1. Ensure gas supply is on.
2. Set thermostat control knob to the required water temperature. (See below).
3. Ensure time switch if fitted is in the ON position.
4. Move electrical ON/OFF switch to ON and the burner will light.
5. Check pilot and main gas connections at gas control valve using leak detection fluid whilst burner is alight. Turn OFF, seal any leakages then re-test.

4.3.2 Shutting off the burner

To shut OFF the burner move switch to OFF then turn OFF the gas service cock.

The water heater should only be turned OFF for long periods, eg holidays, or in an emergency. Otherwise the heater should be left to operate under normal thermostat control.

NB. When using a time control ensure the heater is not turned OFF before the final water draw off occurs. This will ensure the water in the tank is left in a hot condition.

Setting	1	2	3
Approx. Water Temperature	40°C	55°C	70°C

4.3.3 Checking main burner pressure

Fig. 27

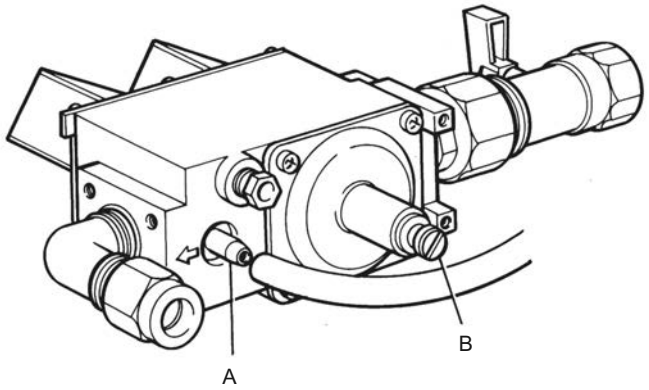

1. Turn gas supply OFF.
2. Release bleed screw A and connect pressure gauge tube (See Fig. 26)
3. Light burner as described previously.
4. Remove cap from port B and adjust pressure using exposed screw in accordance with data plate (See Fig. 26)
5. Shut OFF burner as described previously. Remove pressure gauge tube and tighten bleed screw A.
6. Re-light burner as described previously.

4.4 HIflo Range Auto ignition models

Fig. 28

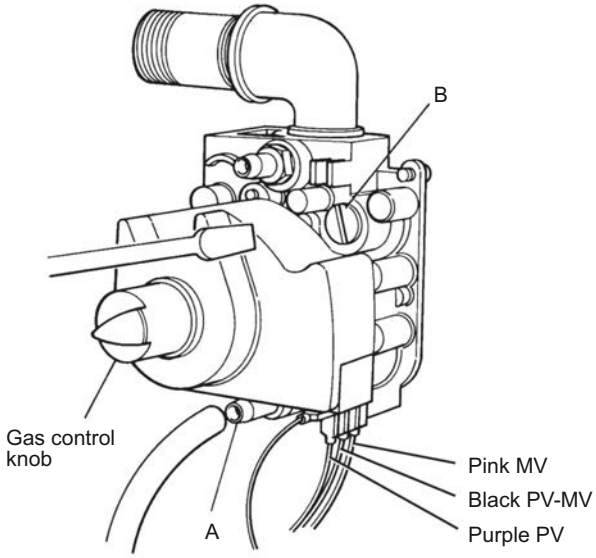

4.4.1 Lighting the burner

1. Ensure gas supply is ON.
2. Turn gas control knob to ON position.
3. Using control thermostat, select required water temperature.
4. Move electrical ON/OFF switch to ON. After a delay of about 10 seconds, the burner will light.
5. Check pilot and main gas connections at gas control valve using leak detection fluid whilst burner is alight. Turn off, seal any leakages, then re-test.

4.4.2 Shutting off the burner

For long periods only, (7 days or more) move electrical ON/OFF switch to OFF, then turn gas control knob to OFF. Turn off gas service cock. For shorter periods, leave heater under thermostat control.

4.4.3 Checking main burner pressure

1. Turn gas control knob to OFF.
2. Release bleed screw A and connect pressure gauge tube.
3. Light burner as described previously.
4. Remove valve cap from port B and adjust pressure using exposed screw in accordance with data plate.
5. Turn screw clockwise to increase pressure and counterclockwise to decrease.

See
If possible, check gas rate (see Technical Data) with meter and watch. Refit valve cap to port B.

6. Turn gas control to PILOT. Remove pressure gauge tube and tighten bleed screw A.
7. Turn gas control knob to ON and light burner as described above.

4.5 Instructing the user

4.5.1 All Standard and HIflo models

When satisfactory commissioning and testing has been achieved, hand this manual to the User or Purchaser and explain the method of economic and efficient operation.

Explain that:

1. Other than for long shutdown periods, the heater must be left operating normally.

2. It is important that the control thermostat is set at the lowest temperature consistent with the user's needs.

See
Ensure that the user or purchaser is fully conversant with the lighting, shutdown and general operating procedures, including the emergency procedure. (see p.35).

Advise that any air vents must be kept clear and items must not be placed or stored in the vicinity of the heater.

Advise of precautions necessary to prevent damage to the heater and systems in the event of the system remaining inoperative during frost conditions.

Advise the user or purchaser that for continued efficient and safe operation of the heater, it is important that magnesium anodes are inspected annually and that adequate servicing is carried out at regular intervals by the installer or by the local gas authority.

4.6 Users safety guide

Note
For your safety read before lighting the appliance

Warning

1. Always follow manufacturers instructions when lighting the appliance. Failure to do so may result in damage to property, personal injury or loss of life.

2. Before lighting check all round the appliance area for gas. Be sure to check at low level because some gas (i.e. LPG) is heavier than air and will settle on the floor.

3. Do not make any attempt to re-light the appliance if the main burner has extinguished. Wait at least 5 minutes to allow for any unburnt gas to disperse. Ventilate the area if possible.

Danger
FOR YOUR SAFETY IF YOU SMELL GAS

1. Turn off gas supply and open windows.

2. Do not operate electrical switches.

3. Extinguish any naked flames.

4. Contact gas supplier if the smell of gas persists.

FOR YOUR SAFETY

Do not store or use petrol, aerosol or other flammable vapours or liquids in the vicinity of this or any other atmospheric gas appliance.

Warning
Hotter water increases the risk of scalding. Before changing the temperature refer to instruction manual or data label. Hot water can produce third-degree burns in:

6 seconds at 60°C

30 seconds at 54°C

5 Operation

5.1 Standard Range

When properly installed and adjusted, the heater will require minimal attention. Should it become necessary to completely drain the heater, close the cold water inlet valve and open a hot water tap to allow air to enter the system. Fit a suitable hose to the drain cock and open.

Whenever the heater is filled with cold water, condensation will form on the storage vessel surfaces when the burner is lit. This is normal and will disappear when the heater warms up.

The gas control fitted to the heater has a built-in limit thermostat (ECO). In the event of high water temperature, the gas supply will be shut off automatically.
The high temperature condition must be identified and rectified before the heater is relit.
The gas control is fitted with a recycling type ECO. This means that, once the water has cooled sufficiently, the ECO circuit will close and allow the heater to be relit.
A replacement gas control valve must be an identical model with the same code number.

5.2 HIflo Range

5.2.1 Permanent pilot models, operating sequence

1. With the pilot lit, the solenoid coil holds the inlet gas port on the gas valve open.

2. The knob on the gas valve is set to the ON position.

3. The control thermostat is set to the desired water temperature, 49°C to 82°C. To set the thermostat, remove the outer cover and turn the adjustment dial to the required temperature.

4. The thermostat should now be in a closed position allowing the current generated by the pilot-energised thermopile to open the main burner valve.

5. The gas valve has a slow burning feature. Burners will light several seconds after setting the thermostat.

6. Burners will continue to heat water until the preset temperature is reached. As the thermostat opens, the thermopile current is interrupted and the main gas valve will close.

5.3 HIflo and Standard Range Auto ignition

5.3.1 Auto ignition units, operating sequence. Hi-Flo and standard range

1. When the control thermostat senses too-cool water, a signal is sent to the control sequence unit.

2. The flue damper unit is de-energised and thus allowed to open. (HIflo only).

3. When the flue damper is fully open, gas is allowed to pass to the pilot and simultaneous ignition begins. (HIflo only).

4. When the pilot flame is established, the main gas solenoid is allowed to slowly open and the main burners or burner is lit.

5. When the control thermostat is satisfied, both pilot and main gas solenoids are closed.

6. The damper motor is energised and the damper closes. (Hi-Flo only).

5.3.2 ECO (energy cut-off)

The heater is equipped with an ECO (Energy Cut-Off) device, fitted to the control thermostat. It is a temperature sensitive switch which opens at high temperature, shutting off gas to the burners, including the pilot in an overheat condition. If the pilot goes out and is associated with high water temperature, the ECO is probably operational and the cause of overheating should be investigated.

5.3.3 Temperature stratification (stacking)

When small amounts of hot water are drawn repeatedly, the thermostat responds to each feed of cold water and activates the main burners. Each time this occurs, more heat may be put back in the tank than was drawn off. As this continues, water in the upper level of the tank gets hotter than the thermostat setting. This hotter water does not mix completely with the cold inlet water but rises in a 'chimney effect' to the top of the tank. Many repetitions of this over a short time period result in accumulation of excessively hot water in the upper part of the tank, even when the thermostat control is within limits. This is known as stacking.

To counter this condition, an upper thermostat phial is fitted (not on Model 32/143) which senses abnormally hot water and shuts down the main burner until the water cools. Most modern commercial pipe installations include a circulating pump which keeps hot water moving continuously throughout the heater. This stabilises temperatures in the water heater tank and throughout the pipe system.

6 Servicing

6.1 Introduction

6.1.1 Servicing must be carried out by a qualified person.

Whilst giving these instructions for the care of the Heater, it is recommended that checks are carried out by the installer or local gas authority, at least annually. Ensure good ventilation by keeping the heater free of extraneous materials and clear of dust and lint. Keep pipework, flue and tops of heaters clear of any combustible materials. A water softener or lime inhibitor should be employed in hard water areas. The heater should be inspected every few months via the hand hole cleanout and lime or silt deposits removed. Failure to do so will shorten heater life and may invalidate the warranty.

Note
The cleanout hole gasket must be renewed whenever the cover is removed.

6.2 Pre-service operations

6.2.1 Before servicing, carry out the following operations.

1. Turn off the gas service cock.
2. Turn off the cold water supply to the heater.
3. Turn on the hot water draw-off taps served by the water heater, or, for multiple installations, turn off the hot water outlet connection valve and secondary return valve.
4. Drain down using the drain valve on the heater.

6.3 Burner assembly standard range

6.3.1 The burner assembly should be checked and cleaned annually.

1. Depress gas control knob and turn to OFF. Remove outer burner cover and slide inner door to the right. On models 63/62 and 84/87, remove two screws to release the inner cover.
2. Disconnect pilot tube, thermocouple and main burner supply tube from bottom of control valve. Withdraw burner assembly from heater.
3. Remove screw securing pilot assembly to main burner.
4. Remove gland nut securing pilot tube to pilot assembly. Withdraw pilot tube and remove pilot restrictor. Clean pilot restrictor with acetone and blow through pilot burner with compressed air.

5. Remove two screws securing main burner supply tube to bottom of burner to gain access to main jet. Remove main jet and clean with acetone. Blow through main burner with compressed air.

CLEAN ORIFICES WITH WOOD SPLINTER. DO NOT USE SHARP METALLIC OBJECTS.

6. Re-assemble in reverse order of steps 2 - 5, but note:

i) Be sure to engage rear section of main burner supply pipe in it's location bracket on base pan of heater.

ii) **DO NOT OVERTIGHTEN THE THERMOCOUPLE CONNECTION. SCREW IN FINGER TIGHT THEN TIGHTEN A FURTHER 1/4 TURN USING A SPANNER.**

iii) Replace and secure inner cover with two screws on Models 63/62 and 84/87.

7. Turn gas control knob to PILOT and depress. Using leak detection fluid, check joints at both ends of the pilot supply tube. Seal if necessary. DO NOT EXAMINE WITH A NAKED FLAME.

8. Allow 3 minutes for unburnt gas to disperse. Light the pilot and check flame is correct. (see Fig. 19). Slide inner door to left (on Models 63/62 and 84/87, lower the inspection port) and turn gas control knob to ON. The main burner will light.

9. Check main burner connection tube at control valve with leak detection fluid and seal if necessary. Replace outer cover.

6.4 Burner assembly HIflo Range

6.4.1 The burner assembly should be checked and cleaned annually.

Note
Models 62/341, 54/418 and 54/440 are fitted with an anchor bracket between the burner manifold and heater body. Take out 2 screws to remove.

1. Turn gas control valve knob to OFF and disconnect union joint from gas service cock.

2. Disconnect thermostat connections (black, red and white wires) from gas control valve.

3. Remove two screws and slide out burner assembly.

4. Disconnect pilot tube and thermopile connections from gas valve. Remove two screws and withdraw pilot/thermopile assembly.

5. Unscrew two wing nuts and remove draught shield. Remove four screws and disconnect manifold from burner tray.

6. Clean burners by brushing internally and externally and by blowing through with compressed air. Do not remove individual burners from the burner tray.

7. Remove the burner and pilot injectors and clean with acetone. **CLEAN ORIFICES WITH**

8. Re-assemble in reverse order but note:
i) The flueways and combustion chamber must be cleaned first.
ii) Use an approved jointing compound when re-fitting burner injectors.

9. Light heater in accordance with lighting instructions. All gas joints must be checked using leak detection fluid. Turn off and seal any leakages. **DO NOT EXAMINE WITH A NAKED FLAME.**

10. Re-light the heater and set the thermostat to the user's requirements.

6.5 Gas control valve Standard Range

Fig. 29

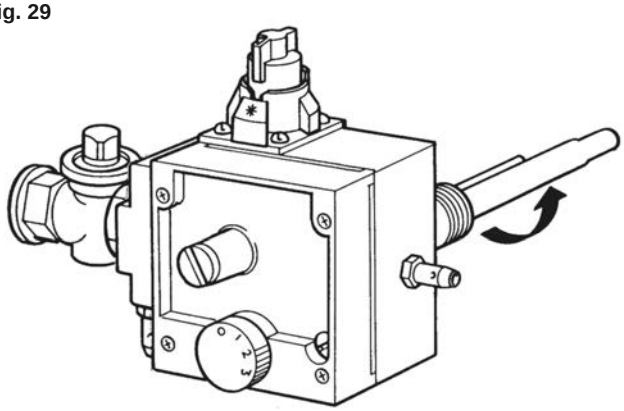

The gas control valve should be checked and serviced by a qualified person, fully conversant with this item.

To remove gas control, first drain appliance, disconnect gas pipe union and turn control anti clockwise, taking care not to damage threads, knobs or the valve itself.

6.6 Gas control valve HIflo Range

The gas control valve should be cleaned and checked. Remove any debris from the valve inlet filter using a soft brush or by blowing with low pressure air.

After servicing, check:-

1. Soundness of any gas joints broken or disturbed and seal any leaks.

2. Burner pressure/gas rate at maximum thermostat setting.

3. Operation of heater is correct. Reset controls to user's requirements.

6.7 Fuel ways standard range

Note
The flue ways should be checked and cleaned annually.

1. Remove burner as described in Burner Assembly, Standard Range.
2. Remove split flue clip from flue and lift off draught diverter.
3. Inspect and clean secondary flue installation as necessary.
4. Lift out baffle from inside central flue way. (not Model 84/87)
5. Clean flue way with a brush and remove deposits from underside of storage vessel and from flue baffle.
6. Re-assemble in reverse order. Be sure to engage rear section of main burner supply pipe in it's location bracket on base pan of heater. DO NOT OVERTIGHTEN THE THERMOCOUPLE CONNECTION. SCREW IN FINGER TIGHT THEN TIGHTEN A FURTHER 1/4 TURN USING A SPANNER.
7. Re-light heater and carry out relevant commissioning procedures as detailed in Section 4.

6.8 Fuel ways HIflo range

Note
The flue ways should be checked and cleaned annually.

1. Remove burner as described in Burner Assembly, HIflo Range.
2. Remove the split clamp and raise the flue system to clear the draught diverter socket.
3. Remove securing screws and remove top cover complete with draught diverter and adaptor ring.
4. Remove top insulation and keep safe.
5. Remove flue collector cover.
6. Remove flue baffles and brush flue tube using 75mm diameter brush with minimum length of 1.4m.
7. Remove deposits from tank top and burner compartment. Replace baffles.
8. Re-assemble collector cover, insulation, top cover, flue system and burner assembly.
9. Carry out relevant commissioning procedures as detailed in Section 4.

Note
For models 65/173 and 81/264, where top inlet/outlet connections are used, both hot and cold connections must be disconnected before removing the top cover.

6.9 Cleaning the storage vessel all models

Note
The storage vessel should be checked and cleaned annually.

Scale formation in the base of the vessel may occur, particularly in hard water areas and is normally associated with high usage and high water temperatures. It is characterised by a rumbling noise when the main burner is lit. Scale formation in the base of the vessel will affect the efficiency of the water heater and reduce the life of the storage vessel.

Note
It should be noted that the failure of the storage vessel due to scale formation on the base will not be covered by the terms of the warranty.

Any scale formation which cannot be removed by normal means of cleaning should be removed by chemical descaling. See below.

6.9.1 Descaling

When descaling the heater, attention is drawn to the following guidelines.

Caution
Due to the corrosive nature of descaling fluid, it is essential that suitable protective clothing is used and adequate ventilation available.

1. Turn gas control to OFF and isolate gas supply.

2. Close water inlet valve and drain heater tank.

3. Remove magnesium anode(s). It is recommended that new anode(s) is(are) fitted.

4. Add suitable hydrochloric acid based descale fluid. The requirement is normally 5 litres for Standard Models and 10 litres for HIflo Models, or more dependant on amount of limescale present.

5. After a minimum of one hour, restore gas supply and turn on main gas burner for 2 minutes maximum.

6. Isolate gas supply and drain descale fluid through drain port.

7. Open cold water feed valve and fill heater tank.

8. Drain and flush out heater for 20 minutes minimum.

9. Replace anode(s).

10. Restore gas supply and re-light heater.

Note
Remove Correx™ anode(s) if fitted and plug off the connections using 3/4” BSP plugs. (Hi- Flo models only). Re-fit the Correx™ anode(s) when the descaling operation is complete.

6.10 Magnesium anode(s) all models

Magnesium sacrificial anode(s) is (are) fitted to the top of the storage vessel.
The anode(s) will prevent corrosion of the storage vessel. Anode condition should be checked annually and replaced if excessive wear is present. We recommend that the anode(s) are replaced annually.

1. Withdraw each anode using a 1¹⁄₁₆ in AF socket spanner. A new anode measures 21mm diameter.

2. An anode should be replaced, if, at any point along it's length, the diameter is reduced to half, or less of original. Particular attention should be paid to the ends.

3. If the anode is encrusted with limescale, it should be either wire brushed to reveal bright metal or replaced.

Note
Where Correx™ anodes are fitted, no maintenance is necessary.

6.11 Safety valve HIflo models

Check the condition and operation of the safety valve as described below.

During Servicing
Examine the safety valve for deposits or let-by. Clean or replace as necessary.

When Re-Commissioning
Operate the safety valve, ensuring no let-by when the valve is reset and reseated.

Note
For adjustable valves, reduce the rating until the valve operates and gives full flow. Reset the valve and check for let-by. For lever operation valves, operate lever and check for let-by when reseated.

6.12 Restart all models

Re-light and carry out commissioning checks as detailed in Section 4, Commissioning. Set the thermostat control to the required user setting.

7 Replacing components, HIflo Range

7.1 Gas control valve

Note
Models 62/341, L62/309, 54/418, 54/440 and L54/399 are fitted with an anchor bracket between the burner manifold and the heater body. Remove two screws to release the anchor bracket.

1. Turn gas control knob and gas service cock to OFF.
2. Disconnect pilot feed pipe, thermocouple and thermostat leads from gas valve.
3. Disconnect union joint from gas service cock.
4. Unscrew two wing nuts and remove draught shield. Remove four screw located at each end of the burner manifold and withdraw gas control/burner manifold as a unit.
5. Unscrew the control valve from the burner manifold noting position of the parts.
6. Remove gas service cock union from the control valve.
7. Re-assembly is reverse of above. The joints between the gas cock union and the control valve to burner manifold must be made using an approved jointing compound suitable for natural gas. The gas valve must be fitted so that it is square relative to the centre line of the injectors.
8. Re-commission the heater as detailed in Section 4, Commissioning.

7.2 User-adjustable control thermostat with limit sensor phial and overheat ECO

Note
These instructions apply to all models but Model 32/143 is not fitted with a limit sensor phial.

1. Turn off the gas control and the service cock.
2. Drain the heater.
3. Remove front cover from control thermostat.
4. Disconnect black, red and white leads and withdraw.
5. Remove phial guard by removing two screws.
6. Remove the clips locating the thermostat capillary.
7. Unscrew gland nut securing limit phial and pull out the phial.
8. Rotate control thermostat/limit phial unit anti-clockwise using a smooth jawed spanner and withdraw.
9. Re-assembly is reverse of above. The joint between control thermostat and tank must be made using an approved jointing compound.
10. Re-commission the heater as detailed in Section 4, Commissioning.

7.3 Thermopile / pilot, burner / pilot restrictor

1. Disconnect thermopile and pilot supply pipe from gas control valve.
2. Remove two screws and withdraw burner assembly.
3. Remove two screws and withdraw pilot assembly.
4. Unscrew gland nut securing thermopile to it's bracket and withdraw.
5. Unscrew pilot feed pipe nut and withdraw pipe. The pilot injector will be left in the pilot burner and may be withdrawn by inverting the burner and allowing it to fall out.
6. Re-assemble pilot assembly and connect pilot pipe only to gas control valve with the pilot assembly outside the heater. Turn on gas service cock. Turn gas control to PILOT and press knob, whilst testing pilot connection at gland nut for soundness with leak detection fluid. Seal any leakages and re-test. Turn gas control valve and service cock to OFF.
7. Re-assembly is reverse of steps 2 to 5.
8. Light the heater in accordance with lighting instructions. All gas joints must be checked for soundness using leak detection fluid. Turn off and seal any leakages. DO NOT EXAMINE WITH A NAKED FLAME.
9. Re-light the heater and set thermostat to user's requirements.

7.4 Burner

Note
Models 62/341, L62/309, 54/418, 54/440 and L54/399 are fitted with an anchor bracket between the burner manifold and the heater body. Remove two screws to release the anchor bracket.

1. Turn off the gas control and the service cock. Disconnect union joint on service cock.
2. Disconnect thermostat connections (black, red and white wires) from gas control valve.
3. Remove two screws and slide out burner assembly.
4. Disconnect pilot tube and thermopile connections from gas valve. Remove two screws and withdraw pilot/thermopile assembly.
5. Remove two screws to remove burner manifold and draught shields.
6. Remove two screws and remove burner fixing bracket.
7. Draw burner forwards to clear it's rear location slot. Replace with new burner.
8. Re-assembly is the reverse of steps 2 to 5.
9. Light the heater in accordance with the lighting instructions. All gas joints must be checked for soundness using leak detection fluid. Turn off and seal any leakages. DO NOT EXAMINE WITH A NAKED FLAME.
10. Re-light the heater and set thermostat to user's requirements.

8 Fault finding

8.1 Permanent pilot models Standard and HIflo Ranges

Fault	Action
WATER DOES NOT GET HOT	(a) Check gas service cock is open. (b) Check water valves are open. (c) Check pilot is alight. (d) Check thermostat setting. reset to higher temperature. (e) Check gas pressures at burner and at gas inlet to appliance. (f) Standard Range. Check cold dip inlet tube for damage.
PILOT FLAME FAILURE	(a) Try to light burner. (b) Pilot will not light. Wait 3 minutes then try again. NOTE: If pilot flame has failed and water is over temperature, ECO may operated. In which case, determine cause of overheating.
PILOT WILL NOT STAY ON	(a) Check gas is available . (b) Check thermopile and ECO connections. Replace if necessary. (c) Check if inlet gas pressure is too high or too low. Pressure to multifunctional control should be 17 mbar to 25 mbar. (d) Pilot jet blocked. Clean or replace pilot jet. (e) Faulty magnet coil. Replace multifunctional control. (f) ECO safety thermostat operating at too low a temperature. Replace faulty control. 400mV from thermopile indicates a good thermopile.
BURNER WILL NOT LIGHT PILOT ESTABLISHED	(a) Thermostat setting too low. (b) Gas control knob not set to ON. (c) Check thermostat for failure to close. (d) Check gas control valve.
THERMOPILE / THERMOCOUPLE BURNS OUT FREQUENTLY	(a) Check pilot connection for loose joints. (b) Check correct ventilation is available. (c) Check flue is clear and is correctly designed and flue terminal is correctly positioned. (d) Check for presence of halogen compounds.

8.2 All models

Fault	Action
HEATER SOOTING, YELLOW FLAME (POOR COMBUSTION)	(a) Check gas burner pressure and injector size. If possible, check heat input with meter and watch. (b) Clean burners and injectors. (c) Flue obstruction. Clean flue ways. (d) Check flue design and termination position. (e) Check for correct ventilation.
WATER TEMPERATURE TOO HIGH	(a) Reset thermostat to lower temperature. (b) Thermostat faulty. Check and replace if necessary. (c) Main gas valve not closing. Clean or replace.
WATER TEMPERATURE TOO LOW	(a) Reset thermostat to higher temperature. (b) Check gas pressures at burner and at gas inlet to heater. (c) Thermostat faulty. Check and replace if necessary.
NOT ENOUGH HOT WATER	(a) Check gas pressures at burner and at gas inlet to heater. (b) Check amount of water being used against recovery rate given on data plate. If usage too high, more heating capacity needed.
WATER DRIPPING FROM BASE OF HEATER	(a) Check if this stops when water in heater is hot. If yes, then condensation is the problem caused by incorrectly designed flue or by tank cooling excessively, i.e. more hot water being used than recovery rate of heater. If so, more heating capacity needed. (b) If water continues to drip when heater is hot, problem is leaking joint or storage vessel.
RUMBLING NOISE	(a) Scale formation in heater, consult water treatment specialist. Heater must be descaled and suitable water treatment provided to avoid re-occurrence.

8.3 Auto ignition units standard range

Fault	Action
NO IGNITION AT PILOT	(a) Check gas service cock is open. (b) Electrical ON/OFF switch is not ON. (c) Power to unit interrupted. (d) Thermostat set too low. (e) Check ECO for failure. Reset. (f) Check for 24V AC at intermittent pilot ignition control terminal No. 1. Replace control if faulty. (g) Faulty Solenoid Coil. Replace if faulty.
PILOT LIGHTS BUT MAIN BURNER DOES NOT	(a) Check for 24V AC at intermittent pilot ignition control terminal No. 3. Replace control if faulty. (b) Faulty Solenoid Coil. Replace if faulty.

8.4 Auto ignition units HIflo models

Fault	Action
CONTINUOUS IGNITION NO PILOT FLAME	(a) Check gas service cock is open. (b) Check gas control knob is ON. (c) Check ECO for failure.
PILOT LIGHTS BUT MAIN BURNER DOES NOT	(a) Main gas valve not energised, opal light is on. Check for loose contacts. (b) Check for 24V AC at intermittent pilot ignition control terminal No. 3. Replace control if faulty. (c) Check for 24V AC at main gas valve terminals. Replace valve if faulty.
FLUE DAMPER REMAINS OPEN WHEN BURNER IS OFF	(a) Faulty damper unit- replace. (b) Power is being interrupted to the unit.
NO IGNITION AT PILOT	(a) Electrical ON/OFF switch is not ON. (b) Thermostat set too low. (c) Power to unit interrupted. (d) Flue damper not open - faulty unit, replace.

8.5 Checking “correx” anodes

1. If red light is flashing on power pack, immerse wires in water including the earth: anode wires (white wires – HIflo x 2 OR Standard Range x 1; and black earth wire (power pack earth) low voltage side.

2. If light stays red, replace power pack: E010 – 2 x Anode on HIflo; C995 – single Anode on Standard Range heaters.

3. If light goes green, investigate: anode rods; poor connection; bad earth; or too much p.t.f.e. around threads acting as an insulator (anode part number: E048).

   For checking individual Correx anodes – leave one white wire connected and put the remaining white wire and black wire into water. If the power pack goes green then this proves that Anode is OK.

4. If necessary to replace a power pack, it is supplied with a 2 pin "shaver" plug which needs to be connected to an un-switched, permanent power supply fused ' 3amps. DO NOT cut off any wire, ONLY the plug.

8.6 LPG permanent pilot models - LPG HIflo ranges

Fault	Action
Loud whistling noise	Check burner primary air shutter settings are correct to dimensions given below. If not reset to dimensions given below. If the whistling persists continue to reduce the settings until the whistling stops.

Heater Model	Air shutter dimension A in mm
L32/143	8
L65/169	5
L81/251	10
L62/309	8
L54/399	8

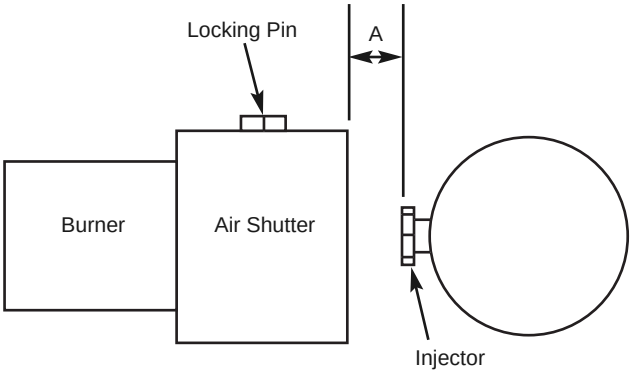

9 Parts list and illustrations

9.1 Standard Range models 24/29, 32/40, 40/61, 63/62 (Natural Gas)

Fig. 30

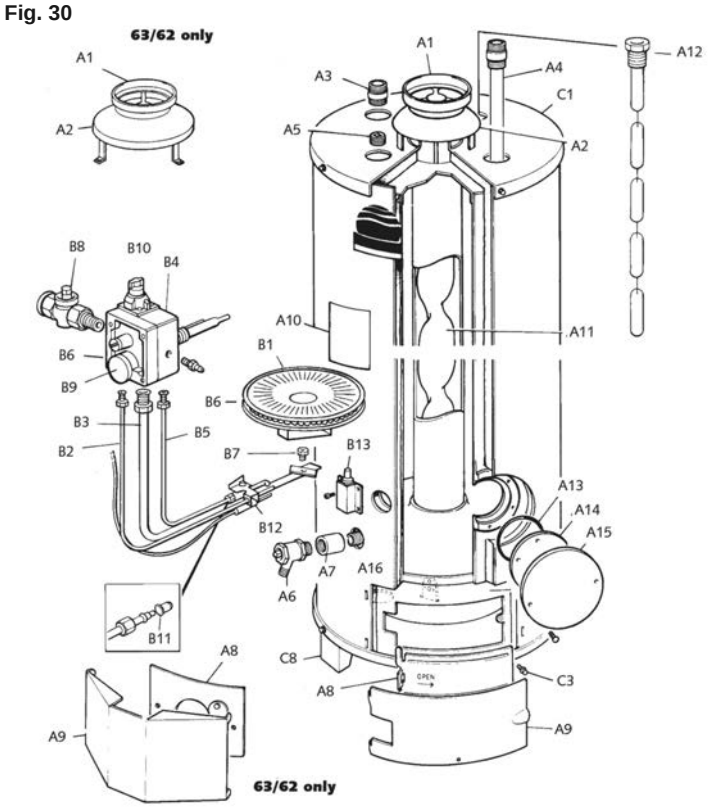

9.2 Standard Range model 84/87 (Natural Gas)

Fig. 31

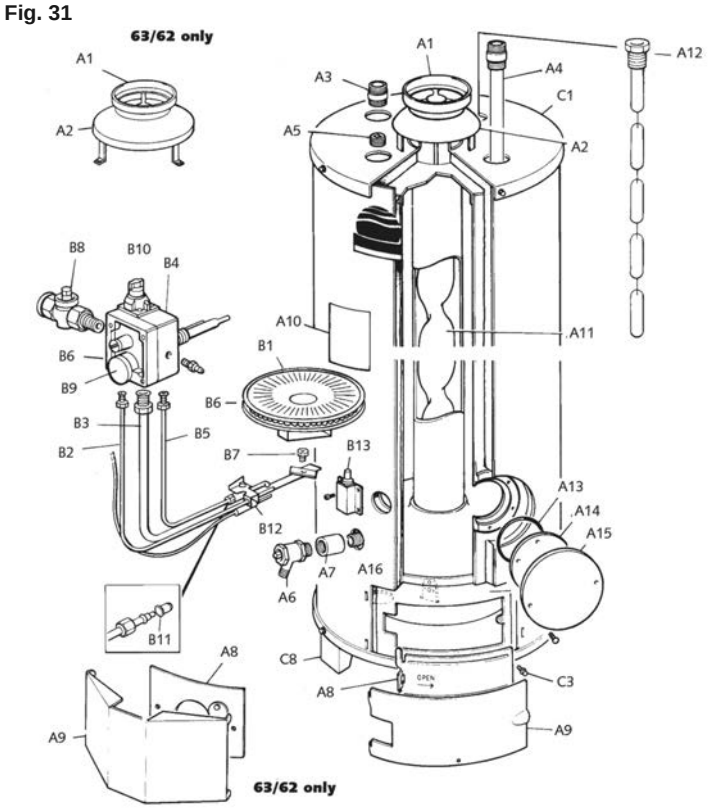

9.3 Standard Range models parts list (Natural Gas)

Model	24/39	32/40	40/61	63/62	84/87		
Ref.	**Part Numbers**					**Description**	**Qty**
A1	C654	C654	C654	C657	C657	Adaptor Ring	1
A2	C653	C653	C655	C656	C658	Draught Diverter	1
A3	C285	C285	C285	C285	C690	Hot Outlet Nipple	1
A4	C286	C292	C293	C293	C691	Cold Inlet Dip Tube	1
A5	C641	C641	C641	C641	C641	Plug Return Connection	1
A6	C381	C381	C381	C381	C381	Drain Cock	1
A7	C103	C103	C103	C103	C103	Socket Coupler 3/4”	1
A8	C449	C449	C449	C660	C660	Cover, Combustion Chamber	1
A9	C450	C450	C451	C329	C329	Cover, Burner Access	1
A10	C701	C702	C703	C704	C705	Data Badge	1
A11	C671	C671	C672	C673	-	Flue Baffle	1
A12	C333	C333	C333	C333	-	Service Magnesium Anode	1
A12	-	-	-	-	C333	Service Magnesium Anode	2
A13	N/A	N/A	N/A	C694	C694	Cleanout Pad Seal	1
A14	N/A	N/A	N/A	C300	C300	Cleanout Pad	1
A15	N/A	N/A	N/A	C301	C301	Cleanout Pad Cover	1
A16	C247	C247	C247	C247	-	Nipple 3/4” NPT x 3/4” BSP	1
A16	-	-	-	-	C247	Nipple 3/4” NPT x 3/4” BSP	2
B1	E145	E146	E147	E148	E003	Burner Assy. Comprising Items B2, B3, B5, B7, B12	1
B2	C405	C406	C406	C407	C407	Pilot Supply Pipe	1
B3	C993	C994	C994	C996	C997	Burner Supply Pipe	1
B4	C965	C965	C965	C966	C974	Multifunctional Control	1
B5	C684	C684	C684	C684	C684	Thermocouple	1
B6	C136	C136	C136	C136	C136	Pressure Test Nipple	1
B7	C679	C680	E149	E149	C683	Injector	1
B8	C382	C382	C382	C382	C382	Gas Cock	1
B9	E016	E016	E016	E016	E016	Control Knob	1
B10	C112	C112	C112	C112	C112	Knob	1
B11	E507	E507	E507	E507	C252	Pilot Burner Jet Type N18	1
B12	C685	C686	C686	C687	C688	Pilot Burner c/w Jet, Pipe Electrode and Lead	1
B13	C514	C514	C514	C514	C514	Piezo Igniter	1
C1	C464	C465	C465	C466	C670	Top Cover Outlet Jacket	1
C2	C416	C417	C417	C668	B669	Base Assy. c/w Radiation Pan	1
C3	C689	C689	C689	C689	C689	Special Screw	10
C4	C661	C662	C662	C663	C664	Combustion Chamber	1
C5	N/A	N/A	N/A	C698	C698	Leg	3

9.4 Standard Range LPG models L24/31, L32/35, L40/36, L63/71

Fig. 31

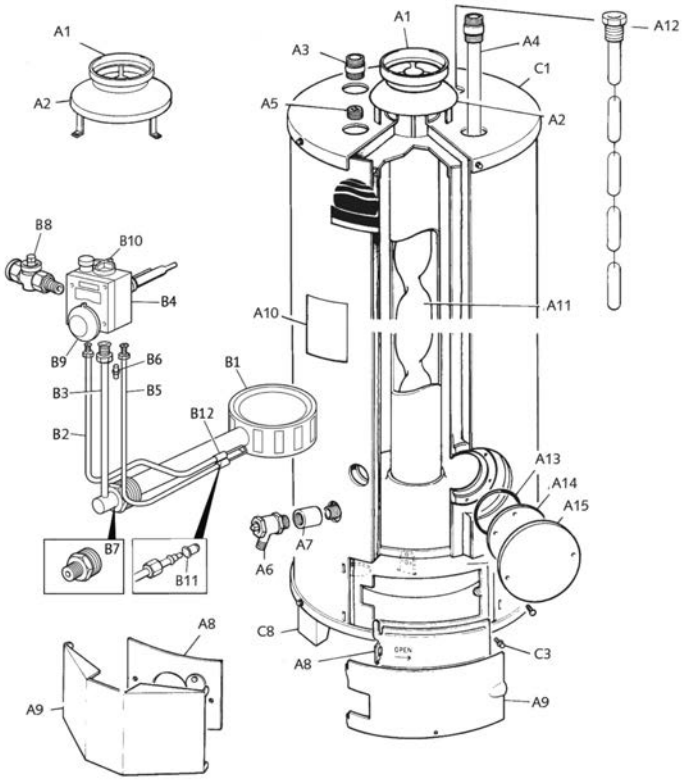

9.5 Standard Range LPG model L84/74

Fig. 31

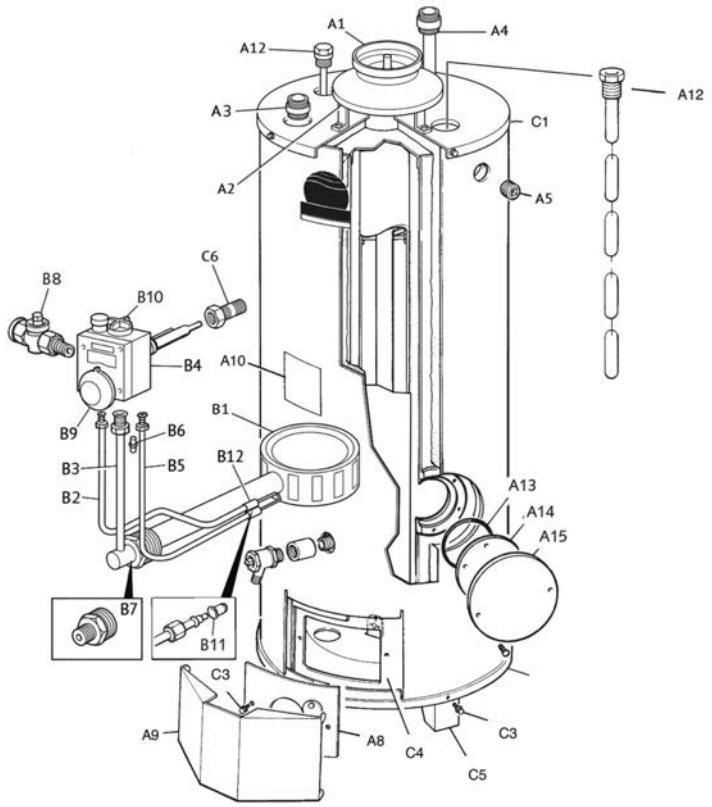

9.6 Standard Range models parts list (LPG)

Ref	Part Number	Description	Qty	L24/31	L32/35	L40/36	L63/71	L84/74
A1	C654	Adaptor Ring	1	•	•	•		
A1	C657	Adaptor Ring	1				•	•
A2	C653	Draught Diverter	1	•	•			
A2	C655	Draught Diverter	1			•		
A2	C656	Draught Diverter	1				•	
A2	C658	Draught Diverter	1					•
A3	C285	Hot Outlet Nipple	1	•	•	•	•	
A3	C690	Hot Outlet Nipple	1					•
A4	C286	Cold Inlet Diptube	1	•				
A4	C292	Cold Inlet Diptube	1		•			
A4	C293	Cold Inlet Diptube	1			•	•	
A4	C691	Cold Inlet Diptube	1					•
A5	C641	Plug Return Connection	1	•	•	•	•	•
A6	C381	Drain Cock	1	•	•	•	•	•
A7	C103	Socket Coupler 3/4”	1	•	•	•	•	•
A8	C449	Combustion Chamber Cover	1	•	•	•		
A8	C660	Combustion Chamber Cover	1				•	•
A9	C450	Burner Access Cover	1	•	•			
A9	C451	Burner Access Cover	1			•		
A9	C329	Burner Access Cover	1				•	•
A10	C735	Data Badge	1	•				
A10	C736	Data Badge	1		•			
A10	C737	Data Badge	1			•		
A10	C738	Data Badge	1				•	
A10	C739	Data Badge	1					•
A11	C671	Flue Baffle	1	•	•			
A11	C672	Flue Baffle	1			•		
A11	C673	Flue Baffle	1				•	
A12	C333	Service Anode	1	•	•	•	•	
A12	C333	Service Anode	2					•
A13	C694	Clean-out Pad Seal	1				•	•
A14	C300	Clean-out Pad	1				•	•
A15	C301	Clean-out Pad Cover	1				•	•
A16	C247	Nipple 3/4” NPT X 3/4” BSP	1	•	•	•	•	
A16	C247	Nipple 3/4” NPT X 3/4” BSP	2					•
B1	C815	Burner Assy Complete	1	•				
B1	C816	Burner Assy Complete	1		•			
B1	C817	Burner Assy Complete	1			•		
B1	C818	Burner Assy Complete	1				•	
B1	C819	Burner Assy Complete	1					•
B2	C405	Pilot Supply Pipe	1	•				
B2	C406	Pilot Supply Pipe	1		•	•		
B2	C407	Pilot Supply Pipe	1				•	•
B3	C828	Burner Supply Pipe	1	•	•	•		
B3	C829	Burner Supply Pipe	1				•	•
B4	G998	Multifunctional Gas Valve	1	•	•	•	•	•
B5	C132	Thermocouple	1	•	•	•	•	•
B6	C136	Pressure Nipple	1	•	•	•	•	•
B7	C820	Injector	1	•				
B7	C821	Injector	1		•	•		
B7	C823	Injector	1				•	•
B8	C382	Gas Cock	1	•	•	•	•	•
B9	C113	Control Knob	1	•	•	•	•	•

Ref	Part Number	Description	Qty	L24/31	L32/35	L40/36	L63/71	L84/74
B10	C114	Pilot Knob	1	•	•	•	•	•
B11	C316	Pilot Injector N11	1	•	•	•	•	•
B12	C412	Pilot Burner Complete	1	•	•	•	•	•
C1	C464	Top Cover Outer Jacket	1	•				
C1	C465	Top Cover Outer Jacket	1		•	•		
C1	C466	Top Cover Outer Jacket	1				•	
C1	C670	Top Cover Outer Jacket	1					•
C2	C416	Base Assy c/w Rad Pan	1	•				
C2	C417	Base Assy c/w Rad Pan	1		•	•		
C2	C668	Base Assy c/w Rad Pan	1				•	
C2	B669	Base Assy c/w Rad Pan	1					•
C3	C689	Special Screws	10	•	•	•	•	•
C4	C661	Combustion Chamber	1	•				
C4	C662	Combustion Chamber	1		•	•		
C4	C663	Combustion Chamber	1				•	
C4	C664	Combustion Chamber	1					•
C5	C698	Support Leg	3				•	•

9.7 HIflo model 32/143 (Natural Gas)

Fig. 32

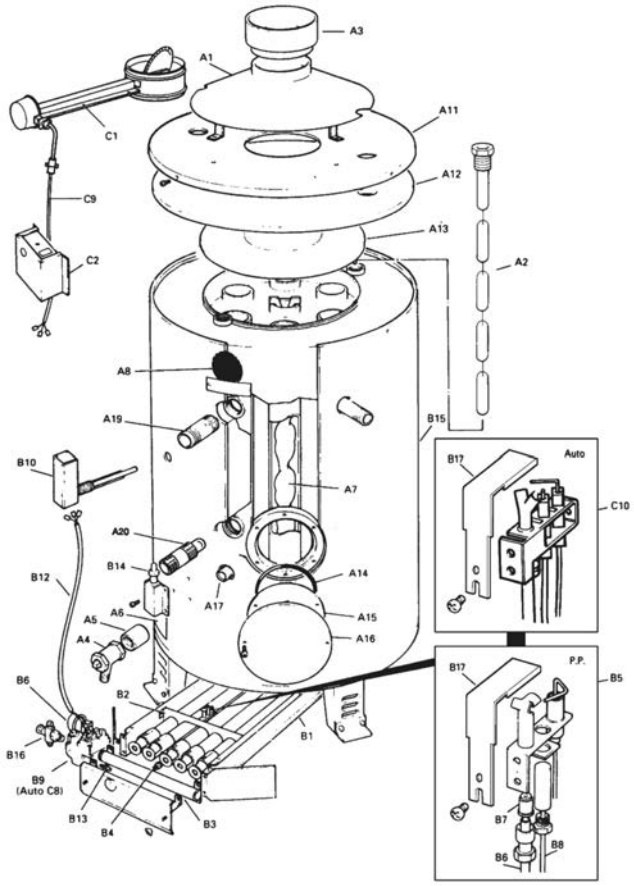

9.8 HIflo models 65/173 and 81/264 (Natural Gas)

Fig. 33

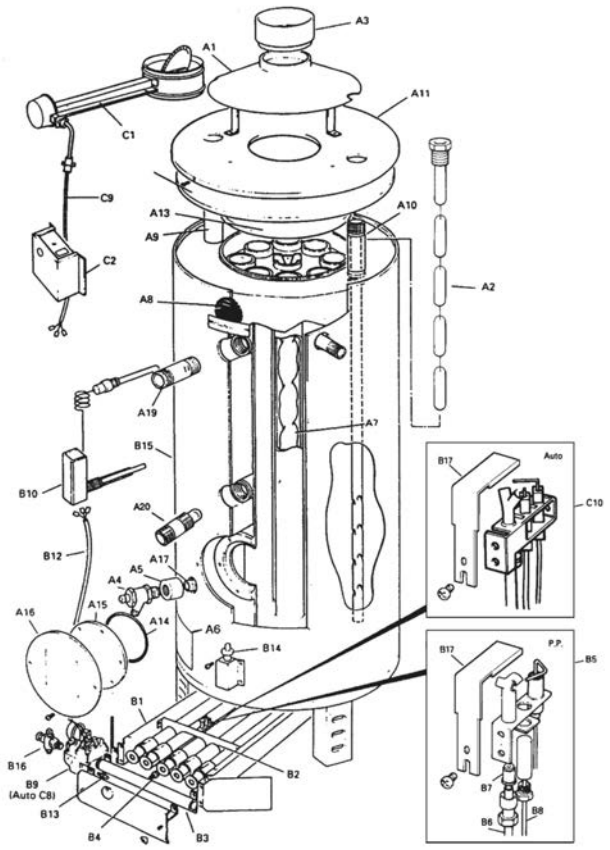

9.9 HIflo models parts list (Natural Gas)

Model	32/143	65/173	81/264		
Ref.	**Part Numbers**			**Description**	**Qty**
A1	E023	C500	C501	Draught Diverter	1
A2	C333	C333	C333	Service Magnesium Anode	2
A3	C334	C344	-	Flue Connector, 150mm, BS 835	1
A4	C381	C381	C381	Drain Cock, BS 2879, 3/4”	1
A5	C103	C103	C103	Socket Coupler 3/4”	1
A6	E021	C475	C476	Data Badge	1
A7	C533	C536	C540	Flue Baffle	8
A8	C235	C235	C235	Andrews Label	1
A9	N/A	C479	C479	Hot Outlet Connection, 1 1/2” BSP	1
A10	N/A	E056	E055	Hydrojet Cold Inlet Connection (top) 1 1/2” BSP	1
A11	C486	C486	C486	Top Cover	1
A12	C488	C488	C488	Insulation Pad	1
A13	E391	C489	C489	Flue Box Top Cover	1
A14	C694	C694	C694	Cleanout Pad Seal	1
A15	C300	C300	C300	Cleanout Pad	1
A16	C301	C301	C301	Cleanout Pad Cover	1
A17	C247	C247	C247	Drain Tapping Connector, 3/4” BSP	1
A19	C534	C534	C534	Nipple, 1 1/2” BSP	4
A20	E050	E050	E050	Hydrojet Cold Inlet Connection (side) 1 1/2” BSP	1
B1	E031	C537	C541	Burner Assy. Comprising Items B2, B6, B8, B9	1
B2	C503	C503	C503	Burner Bar	5
B3	C505	C505	C505	Burner Manifold	1
B4	E017	-	-	Injector 2.69mm P.P.	5
B4	E552	-	-	Injector 2.40mm Auto	5
B4	-	C538	-	Injector 2.87mm P.P.	5
B4	-	E551	-	Injector 2.58mm Auto	5
B4	-	-	C542	Injector 3.66mm P.P.	5
B4	-	-	E553	Injector 3.25mm Auto	5
B5	C507	C507	C507	Pilot Assy. c/w Injector and Electrode	1
B6	C508	C508	C508	Pilot Supply Pipe	1
B7	C252	C252	C252	Pilot Injector	1
B8	C552	C552	C552	Thermopile	1
B9	C511	C511	C511	Multifunctional Valve	1
B10	C512	-	-	Control Thermostat / Overheat ECO	1
B10	-	C539	C539	Control Thermostat with Remote Phial and ECO	1
B12	C513	C559	C559	Lead Assy. Thermostat to Gas Valve	1
B13	C136	C136	C136	Pressure Test Nipple	1
B14	C514	C514	C514	Piezo Igniter	1
B16	C498	C498	C498	Gas Cock 3/4” BSP FxF	1
B17	E418	E418	E418	Pilot Shield	1
C1	C480	C480	C480	Flue Damper Assy. 6”	1
C2	B258	B258	B258	Control Box Assy. Complete Auto	1
C8	Z090	Z090	Z090	Gas Control Valve Auto	1
C9	C970	C969	C969	Damper Harness Auto	1
C10	E839	E839	E839	Pilot Assembly Auto	1

9.10 HIflo models 62/341 and 54/418/440 (Natural Gas)

Fig. 34

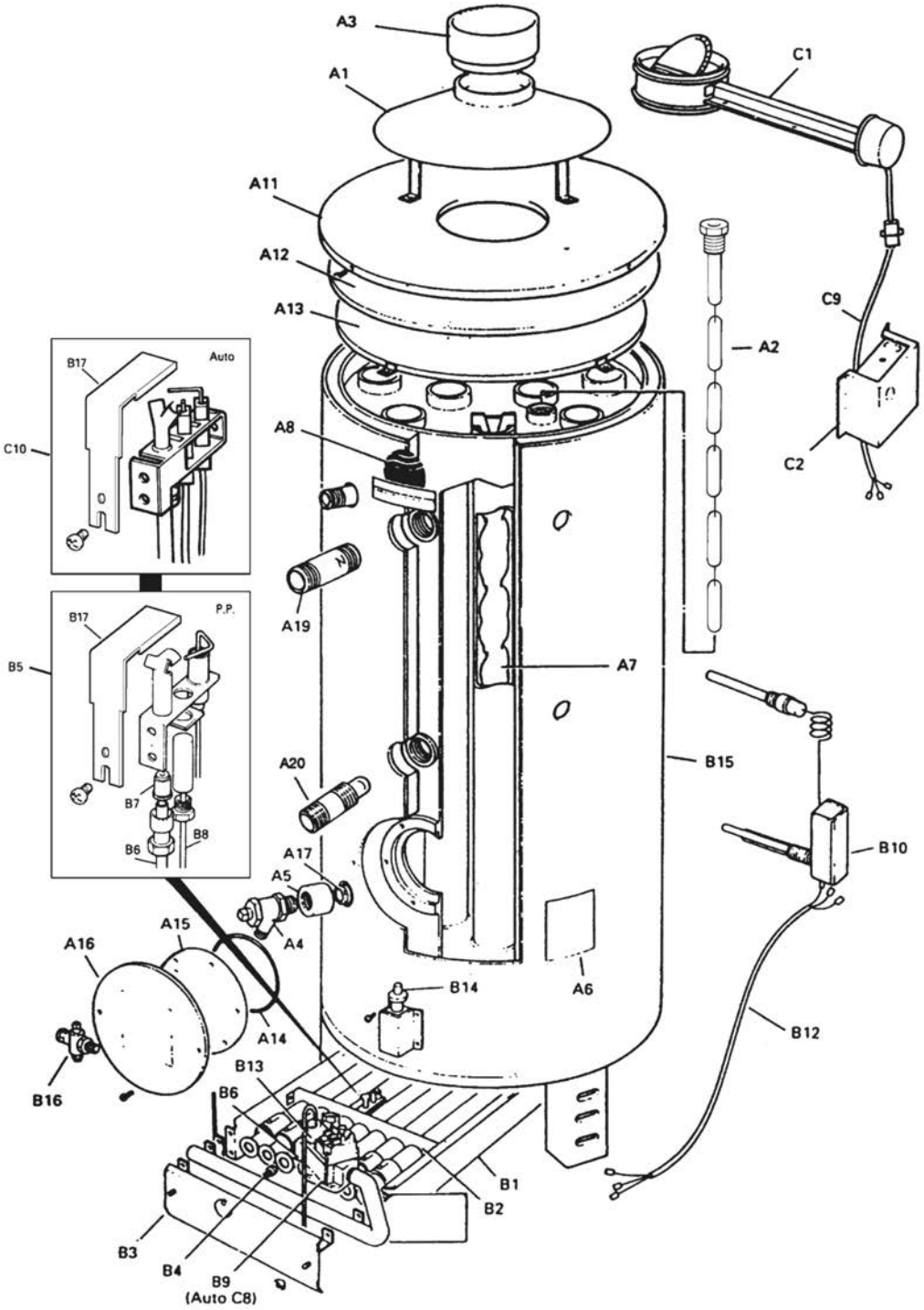

9.11 HIflo models parts list (Natural Gas)

Model	62/341	54/418/440		
Ref.	**Part Numbers**		**Description**	**Qty**
A1	C501	C548	Draught Diverter	1
A2	C333	C333	Service Magnesium Anode	2
A3	C432	-	Flue Connector, 200mm, BS 835	1
A3	-	C335	Flue Connector, 250mm, BS 835	1
A4	C381	C381	Drain Cock, BS 2879, 3/4”	1
A5	C103	C103	Socket Coupler 3/4”	1
A6	C474	C473/C492	Data Badge	1
A7	C543	-	Flue Baffle	11
A7	-	C543	Flue Baffle	16
A8	C235	C235	Andrews Label	1
A11	C487	C554	Top Cover	1
A12	C488	C488	Insulation Pad	1
A13	C490	E392	Flue Box Top Cover	1
A14	C694	C694	Cleanout Pad Seal	1
A15	C300	C300	Cleanout Pad	1
A16	C301	C301	Cleanout Pad Cover	1
A17	C247	C247	Drain Tapping Connector, 3/4” BSP	1
A19	C534	C534	Nipple, 1 1/2” BSP	4
A20	E050	E050	Hydrojet Cold Inlet Connection (side) 1 1/2” BSP	1
B1	C544	C549	Burner Assy. Comprising Items B2, B6, B8, B9	1
B2	C503	C503	Burner Bar	7-9
B3	C545	C550	Burner Manifold	1
B4	C546	-	Injector 3.45mm P.P.	7
B4	E550	-	Injector 3.18mm Auto	7
B4	-	C551	Injector 3.60mm P.P.	9
B4	-	E549	Injector 3.26mm Auto	9
B5	C507	C507	Pilot Assy. c/w Injector and Electrode	1
B6	C547	C547	Pilot Supply Pipe	1
B7	C252	C252	Pilot Injector	1
B8	C552	C552	Thermopile	1
B9	C511	C511	Multifunctional Valve	1
B10	C539	C539	Control Thermostat with Remote Phial and ECO	1
B12	C560	C560	Lead Assy. Thermostat to Gas Valve	1
B13	C136	C136	Pressure Test Nipple	1
B14	C514	C514	Piezo Igniter	1
B16	C498	C498	Gas Cock 3/4” BSP FxF	1
B17	E418	E418	Pilot Shield	1
C1	C481	C482	Flue Damper Assy. 8” - 10”	1
C2	B258	B258	Control Box Assy. Complete Auto	1
C8	Z090	Z090	Gas Control Valve	1
C9	C969	C969	Damper Harness Auto	1
C10	E839	E839	Pilot Assembly Auto	1

9.12 HIflo LPG model L32/143

Fig. 31

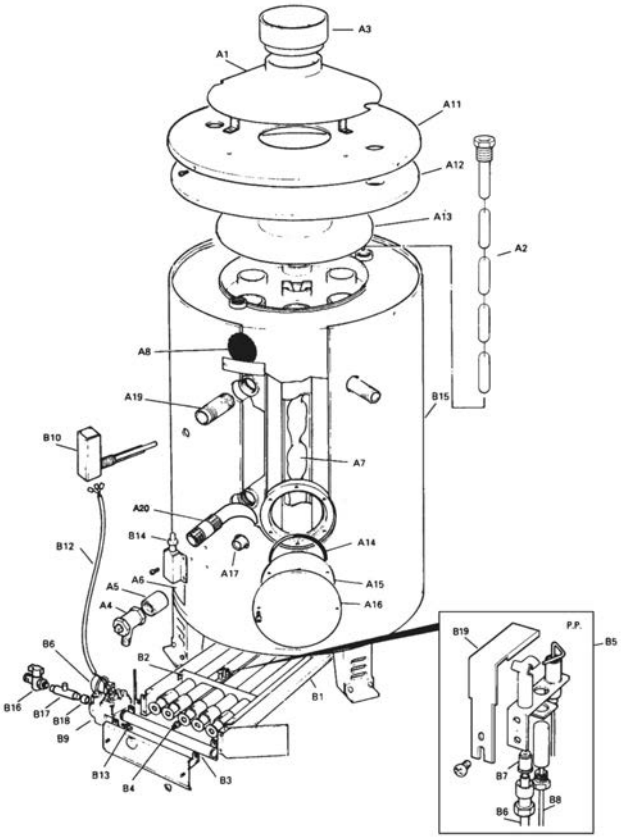

9.13 HIflo LPG models L65/169, L81/251

Fig. 31

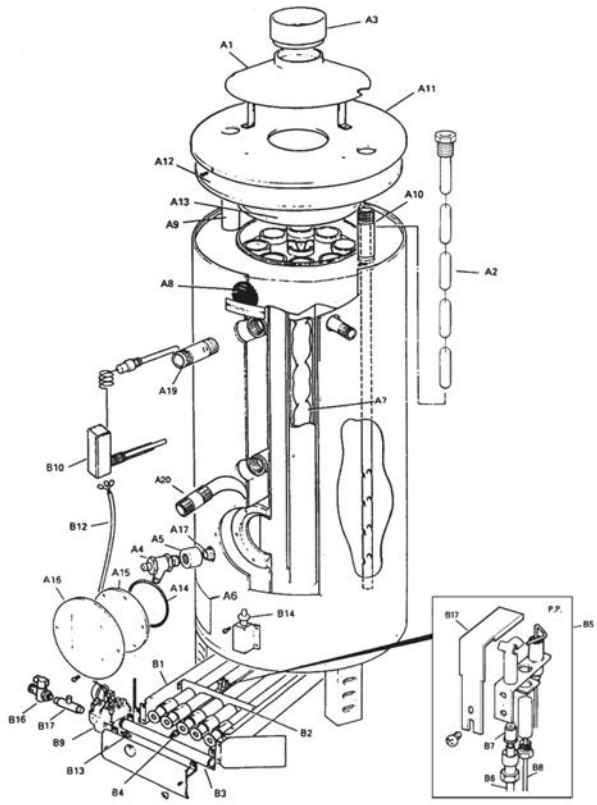

9.14 HIflo P.P Water Heater parts list (LPG)

Ref	Part Number	Description	Qty	L32/143	L65/169	L81/251
A1	E023	Draught Diverter	1	•		
A1	C500	Draught Diverter	1		•	
A1	C501	Draught Diverter	1			•
A2	C333	Service Anode	2	•	•	•
A3	C334	Flue Connector 150mm	1	•	•	
A3	C432	Flue Connector 200mm	1			•
A4	C381	Drain Cock 3/4”	1	•	•	•
A5	C103	Socket Coupler 3/4”	1	•	•	•
A6	E022	Data Badge	1	•		
A6	C494	Data Badge	1		•	
A6	C495	Data Badge	1			•
A7	C533	Flue Baffle	8	•		
A7	C536	Flue Baffle	8		•	
A7	C540	Flue Baffle	8			•
A8	C235	Andrews Label	1	•	•	•
A9	C479	Hot Outlet Connection 1 1/2” BSP	1		•	•
A10	E056	Hydroject Cold Inlet Connection	1		•	
A10	E055	Hydroject Cold Inlet Connection	1			•
A11	C486	Top Cover	1	•	•	•
A12	C488	Insulation Pad	1	•	•	•
A13	E391	Flue Box Top Cover	1	•		
A13	C489	Flue Box Top Cover	1		•	•
A14	C299	Cleanout Pad Seal	1	•	•	•
A15	C300	Cleanout Pad	1	•	•	•
A16	C301	Cleanout Pad Cover	1	•	•	•
A17	C247	Drain Tapping Connector 3/4” BSP	1	•	•	•
A19	C534	Nipple 1 1/2” BSP	4	•	•	•
A20	E050	Hydroject Cold Inlet Connection	1	•	•	•
B1	E032	Burner Assy	1	•		
B1	C565	Burner Assy	1		•	
B1	C566	Burner Assy	1			•
B2	C503	Burner Bar	5	•	•	•
B3	C505	Burner Manifold	1	•	•	•
B4	E018	Injector 1.6mm	5	•		
B4	C570	Injector 1.7mm	5		•	
B4	C571	Injector 1.85mm	5			•
B5	C576	Pilot Assy	1	•	•	•
B6	C508	Pilot Supply Pipe	1	•	•	•
B7	C316	Pilot Injector	1	•	•	•
B8	C552	Thermopile	1	•	•	•
B9	C575	Multifunctional Gas Valve	1	•	•	•
B10	C512	Control Thermostate	1	•		
B10	C539	Control Thermostat c/w Remote File	1		•	•
B12	C513	Lead Assy	1	•		
B12	C559	Lead Assy	1		•	•
B13	C136	Pressure Test Point	1	•	•	•
B14	C514	Piezo Igniter	1	•	•	•
B16	C498	Gas Cock 3/4” BSP	1	•	•	•
B17	C578	Inlet Nipple 3/4” NPT to BSP	1	•	•	•
B18	C577	Restrictor Inlet 4.50mm	1	•	•	
B19	E418	Pilot Shield	1	•	•	•

9.15 HIflo LPG models L62/309, L54/399

Fig. 31

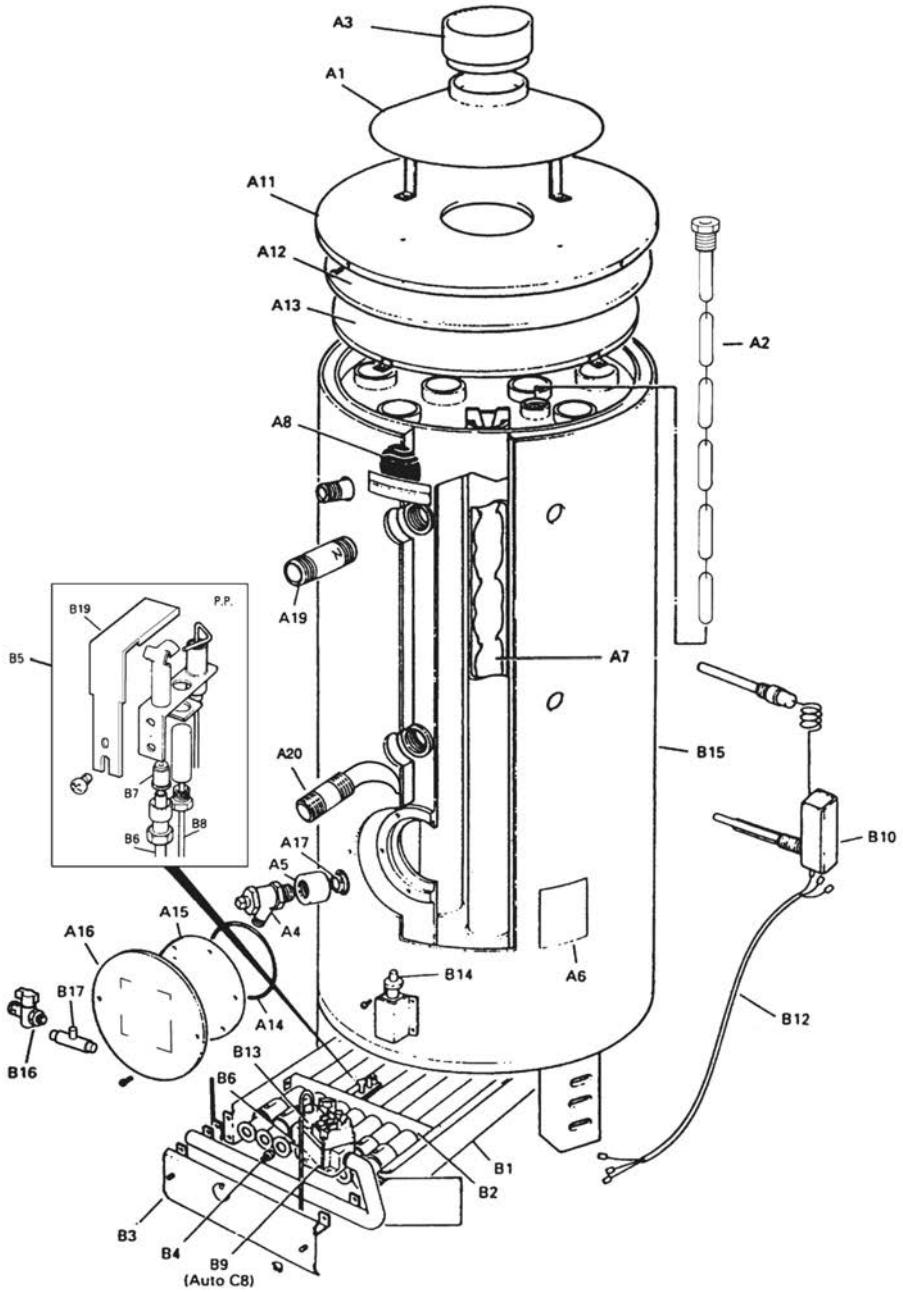

9.16 HIflo P.P Water Heater parts list (LPG)

Ref	Part Number	Description	Qty	L62/309	L54/399
A1	C501	Draught Diverter	1	•	
A1	C548	Draught Diverter	1		•
A2	C333	Service Anode	2	•	•
A3	C432	Flue Connector 200mm	1	•	
A3	C435	Flue Connector 250mm	1		•
A4	C381	Drain Cock 3/4”	1	•	•
A5	C103	Socket Coupler 3/4”	1	•	•
A6	C496	Data Badge	1	•	
A6	C497	Data Badge	1		•
A7	C543	Flue Baffle	11	•	
A7	C540	Flue Baffle	16		•
A8	C235	Andrews Label	1	•	•
A11	C487	Top Cover	1	•	
A11	C554	Top Cover	1		•
A12	C488	Insulation Pad	1	•	•
A13	C490	Flue Box Top Cover	1	•	
A13	E392	Flue Box Top Cover	1		•
A14	C299	Cleanout Pad Seal	1	•	•
A15	C300	Cleanout Pad	1	•	•
A16	C301	Cleanout Pad Cover	1	•	•
A17	C247	Drain Tapping Connector 3/4” BSP	1	•	•
A19	C534	Nipple 1 1/2” BSP	4	•	•
A20	E050	Hydroject Cold Inlet Connection	1	•	•
B1	C567	Burner Assy	1	•	
B1	C568	Burner Assy	1		•
B2	C503	Burner Bar	7	•	
B2	C503	Burner Bar	9		•
B3	C545	Burner Manifold	1	•	
B3	C550	Burner Manifold	1		•
B4	C572	Injector 1.78mm	7	•	
B4	C572	Injector 1.78mm	9		•
B5	C576	Pilot Assy	1	•	
B5	C572	Pilot Assy	1		•
B6	C547	Pilot Supply Pipe	1	•	
B6	C576	Pilot Supply Pipe	1		•
B7	C316	Pilot Injector	1	•	•
B8	C552	Thermopile	1	•	•
B9	C575	Multifunctional Gas Valve	1	•	•
B10	C539	Control Thermostat c/w Remote File	1	•	•
B12	C560	Lead Assy	1	•	•
B13	C136	Pressure Test Point	1	•	•
B14	C514	Piezo Igniter	1	•	•
B16	C499	Gas Cock 3/4” BSP	1	•	•
B17	C578	Inlet Nipple 3/4” NPT to BSP	1	•	•
B19	E418	Pilot Sheild	1	•	•

9.17 Unvented systems kit - Standard Range

Fig. 35

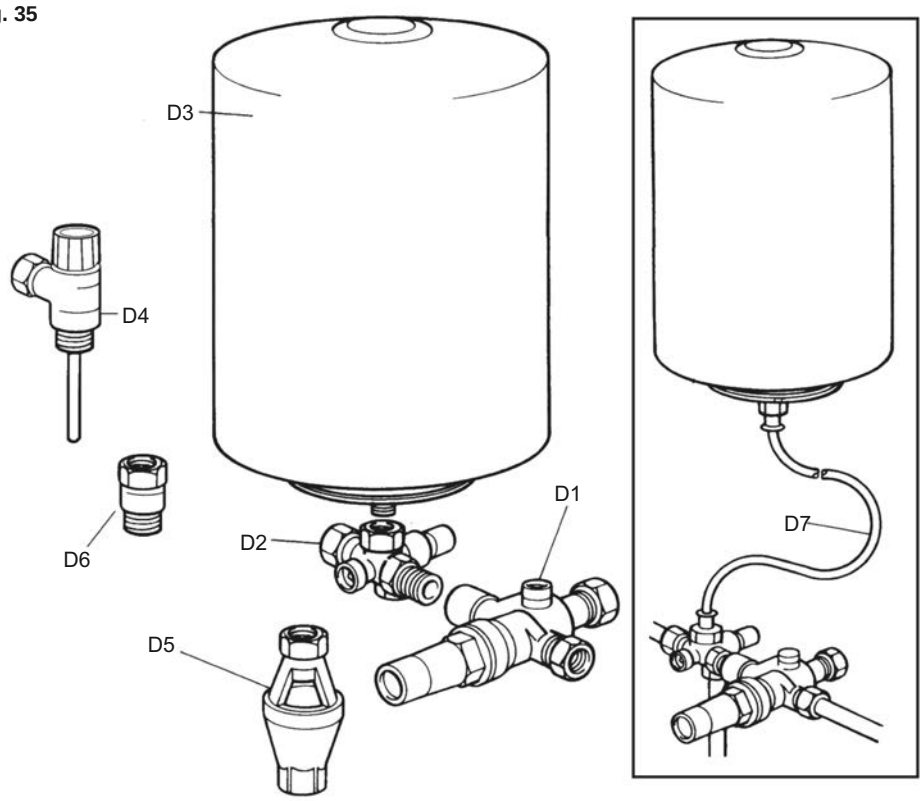

9.18 Unvented systems kit - HIflo range

Fig. 36

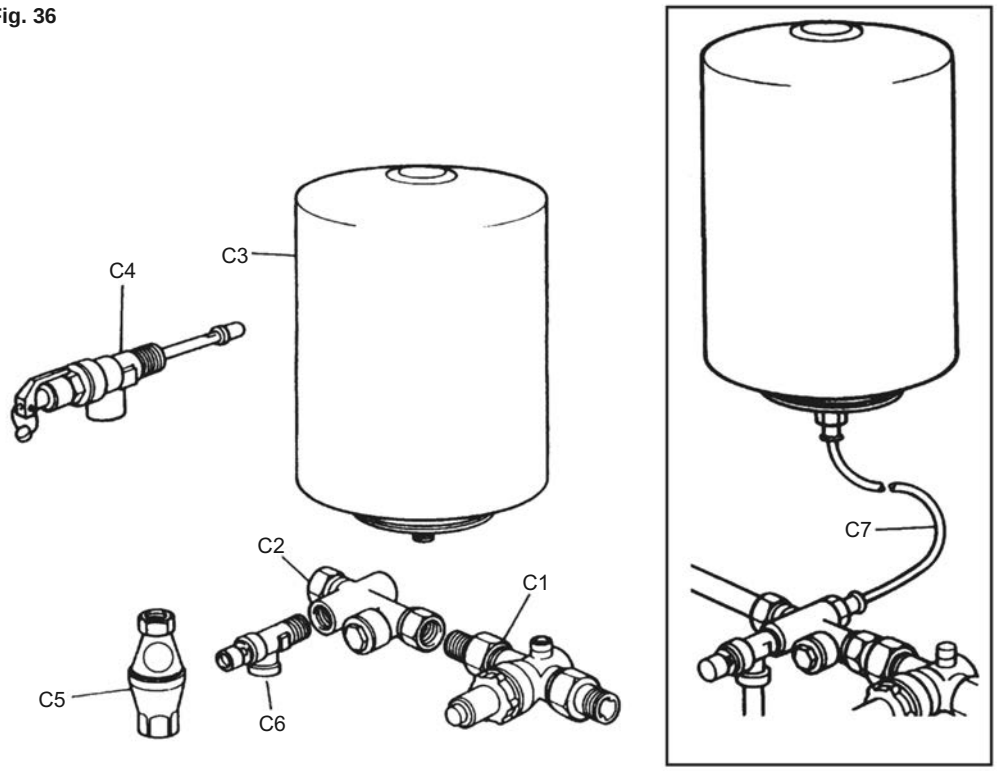

9.19 Unvented systems kit - Standard Range parts list

Ref.	Part No.	Description	Qty
	B171	Unvented Systems Kit Complete	1
D1	C780	Pressure Reducing Valve / Strainer	1
D2	C781	Check Valve / Expansion Valve	1
D3	C782	Expansion Vessel	1
D4	E462	Temperature / Pressure Relief Valve	1
D5	C783	Tundish	1
D6	C772	Adaptor	1
D7	C788	Hose Assembly	1

9.20 Unvented systems kit - HIflo range parts list

Ref.	Part No.	Description	Qty
	B290	Unvented Systems Kit Complete	1
C1	C784	Pressure Reducing Valve / Strainer	1
C2	C785	Check Valve	1
C3	C782	Expansion Vessel	1
C4	C380	Temperature / Pressure Relief Valve	1
C5	C384	Tundish	1
C6	C786	Expansion Valve	1
C7	C788	Hose Assembly	1

9.21 24 Volt auto system kit B217

Fig. 37

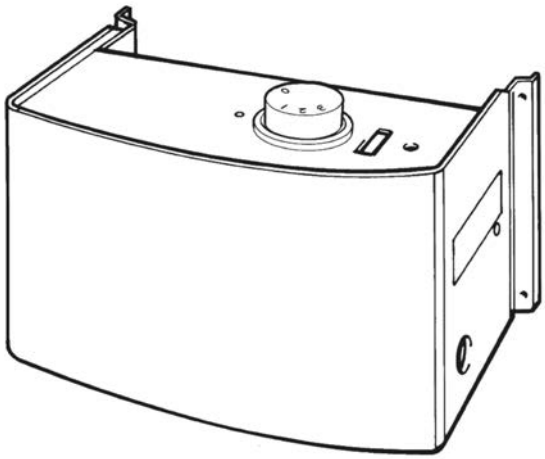

9.22 24 Volt auto system kit B258

Fig. 38

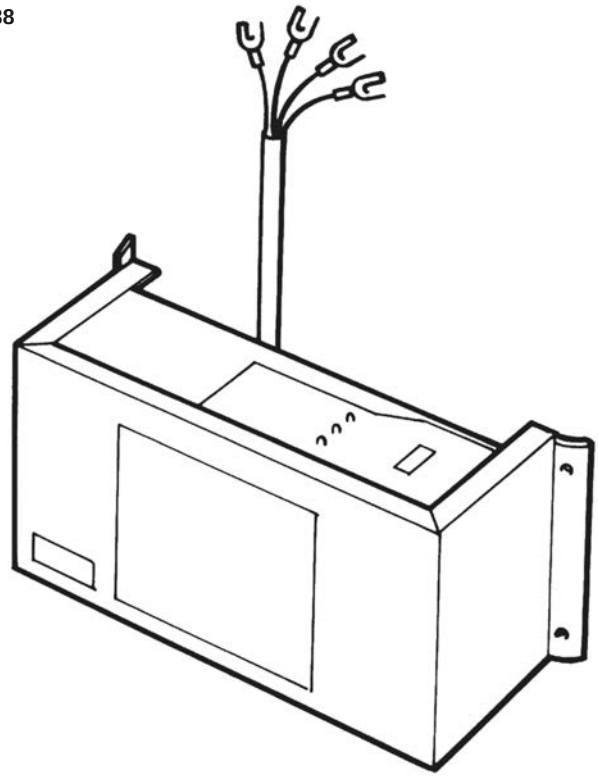

9.23 24 Volt auto system kit Standard Range parts list

Part No.	Description	Qty
B217	240 Volt Auto System Kit Complete (nat gas)	1
C521	On/Off Switch	1
C641	Mains Indicator Light	1
G122	EP6 Control Module	1
E115	Transformer	1
E116	Limit Thermostat	1
E117	Control Thermostat	1
E120	Control Thermostat Knob	1
G059	230 Volt Gas Valve	1
E126	24 Volt Solenoid Coils	2
Z092	Gas Valve (Automatic Ignition) Complete with 240 Volt Solenoid Coils	1
Z093	240 Volt Solenoid Coil(s)	1
E127	Pilot Assembly (nat gas)	1
E128	Ignition / Flame Probe	1
E135	HT Lead 24”	1

9.24 24 Volt auto system kit HIflo range parts list

Part No.	Description	Qty
B258	240 Volt Auto System Kit	1
E839	Pilot Assembly	1
C521	On / Off Switch	1
C531	Label - Andrews	1
C644	Label - Warning	1
C989	Label - On / Off	1
	Label - Wiring	1
Z090	Gas Control Valve	1
E669	Control Circuit Board	1

10 Appendix

10.1 HIflo auto ignition “G” series addendum

10.1.1 Features of Honeywell integrated controls system

- Attractive digital water heater display on control panel for setting and displaying the temperature setpoint. Pressing temperature up and down buttons changes the temperature setpoint. Temperature format may be displayed in degrees F or degrees C.
- Single control board with plug in wiring controls temperature, ignition, and flue damper operation.
- Reduced number of parts for servicing and wiring.
- Plug in wiring reduces chance of miswiring.
- Water heater display will show diagnostic codes in the event the water heater needs servicing. Aids in diagnosing and servicing the water heater.
- Water heater display can show up to 10 previous error codes in the service mode to further aid in servicing the water heater.

10.2 Specifications

Power Supply	Dedicated 120 VAC, 60 Hz., 15 A
Current Draw	Less than 5 Amps.
Gas Supply Connection for	25mm NPT connection to gas valve for 370,000 Btu/hr. and over for natural gas, 19mm NPT rest. Schedule 40 black iron pipe recommended.
Approved Gas Type	Natural or Propane. Gas supply must match the gas type listed on the water heater rating label.
Minimum Clearance for Servicing	610mm Front Clearance, 508mm Top, 152mm Sides.
Maximum Water Supply Pressure	150 PSI.
Thermostat Sensor(s)	Redundant thermistor with 11,900 + or - 0.5% ohms resistance at 21°C. Sensor inside well for lower sensor. Some models use an additional upper sensor (w/o well) with same resistance values.
Control Board	Honeywell Integrated Control Board for Temperature Control, Flue Damper, and Ignition Control Functions. Operates on 24 volts AC current from transformer. Some models use single sensor boards, others use two sensors.
Control Display	Honeywell LCD Control Display with Temperature Setpoint, Format, and Error Code Display in User Mode, Diagnostic Functions in Service Mode. Communicates with Control Board.
Transformer	120 VAC Primary, 24 VAC Secondary, 40 VA.
Pilot	Intermittent Pilot with Spark Electrode and Flame Sensor monitored by Control Board.
Flue Damper	24 VAC, 60 Hz., 80 Ma.

10.3 Sequence of operations

Fig. 39

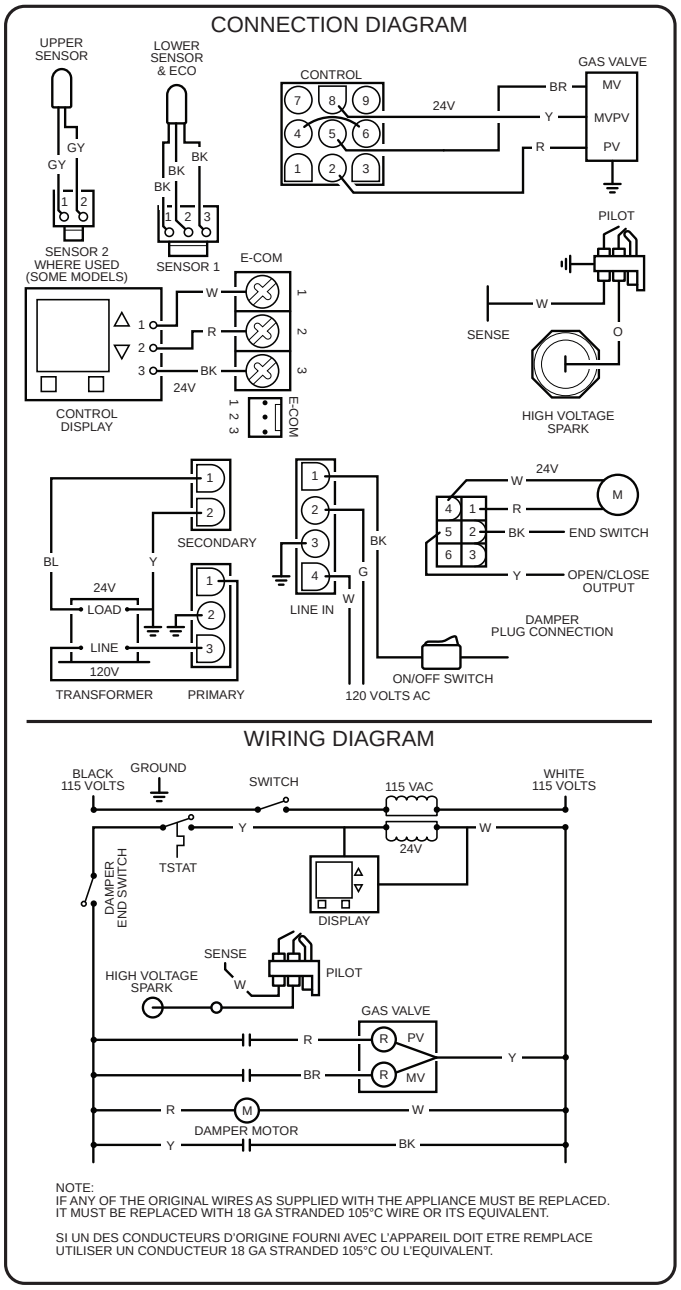

* For enable option (time control), break terminal No.1 on secondary side of transformer

1. Thermostat calls for heat.
   The control board sends 24 volts from damper terminal #2 on the control plug to the flue damper.

2. Flue damper begins to rotate open. Once the flue damper is fully open, the damper end switch closes and 24 volts is allowed to continue through damper to damper pin terminal #5.

3. Trial for ignition (three 90 second ignition trials, with 65 second pauses between trials).

   Control Board simultaneously sends:

   1. 24 volts from control pin terminal #8, to "MV/PV" terminal of gas valve (common terminal).
   2. 24 volts from control pin terminal #2, to "PV" terminal of gas valve to establish gas flow at pilot.
   3. Low current high voltage from "spark" terminal, to generate spark at the pilot and ignite pilot gas flow.
   4. Pilot flame proving signal (measured in micro-amps). from the "sense" terminal, to prove pilot flame.

4. Once pilot flame is proven, sparking will stop.

5. Once sparking stops, 24 volts is sent from control pin terminal #5 on control board, to "MV" terminal on gas valve to establish main burner gas flow. Main burners ignite from the pilot flame.

6. The control board constantly monitors pilot flame through the flame sensor rod. If pilot flame is lost, pilot and main burners are shut down. After a 65 second inter-purge period, the control will attempt to re-light the pilot beginning at sequence 3 above.

7. Main burner fires until the thermostat is satisfied. The control board interrupts 24 volts through the damper and the gas valve circuit. Pilot and main burners are turned off.

8. Flue damper rotates to the closed position.

LOCKOUT CONDITION

Control board will go into "Soft Lockout" if the pilot cannot be lit after 3 ignition trials. The water heater display indicates a lockout condition by showing an error code number (62 or 63) with "Service Needed" in the display window. Refer to error codes in the diagnostic section of this Service Manual. In a "Soft Lockout" condition, the control will wait for 60 minutes and then make 3 more attempts to light the pilot and establish the main burners.

Soft lockout reset is accomplished by depressing the lower right button under "Reset" for 3 seconds.

If the water heater should reach 93°C, then the high limit control will shut off the burners and the water heater will go into a "Hard Lockout". Error code 65 will be shown in the water heater display. The control can only be reset in the "service mode", which is detailed in the next section of this Service Manual.

10.4 Troubleshooting

Caution
Use Caution Not to Damage Connectors when making Voltage Measurements or Jumping Terminals

Water Heater Fault:	Water heater does not operate
Display Error Code:	Water heater display does not operate - blank display

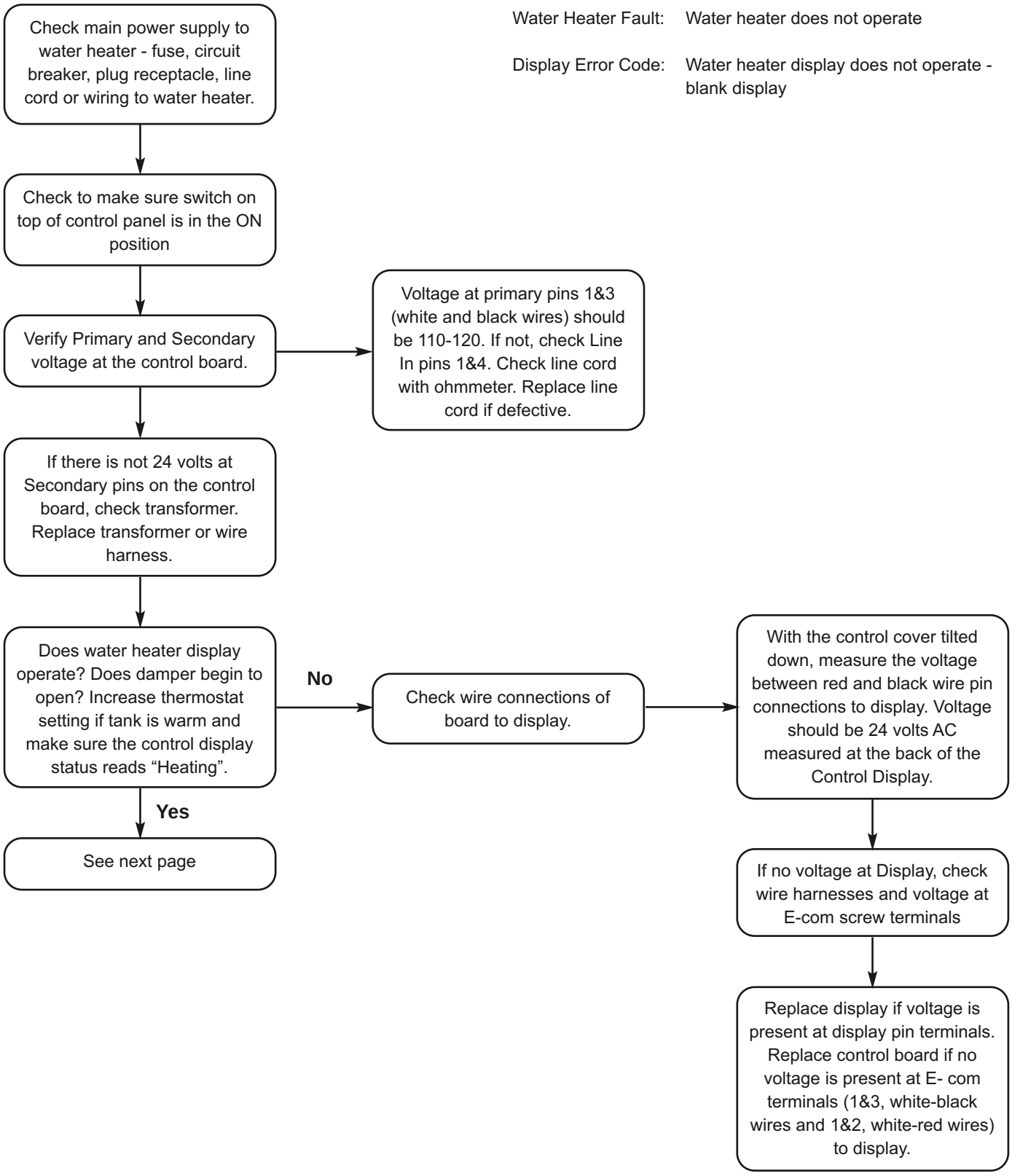

Caution
Use Caution Not to Damage Connectors when making Voltage Measurements or Jumping Terminals

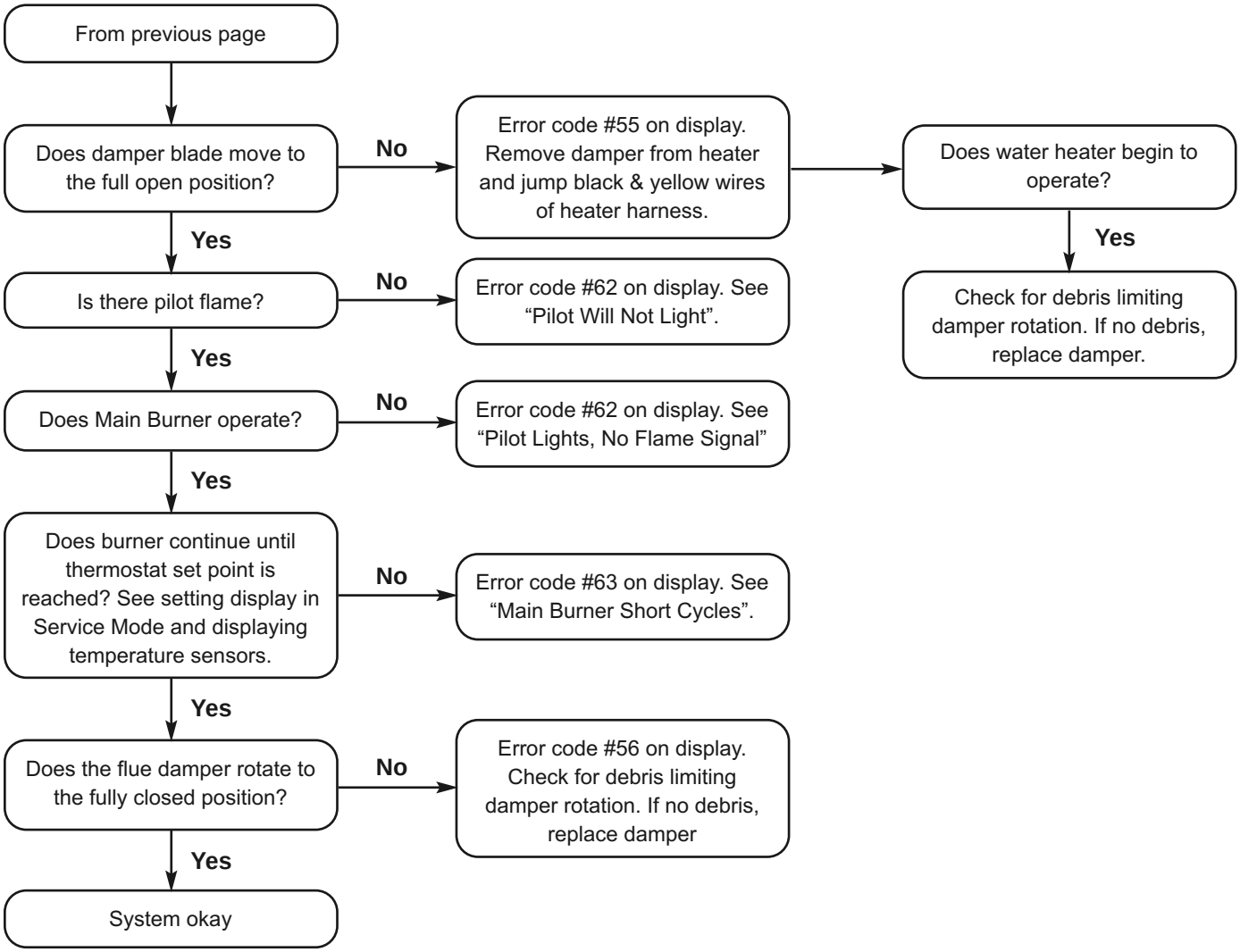

Fig. 40

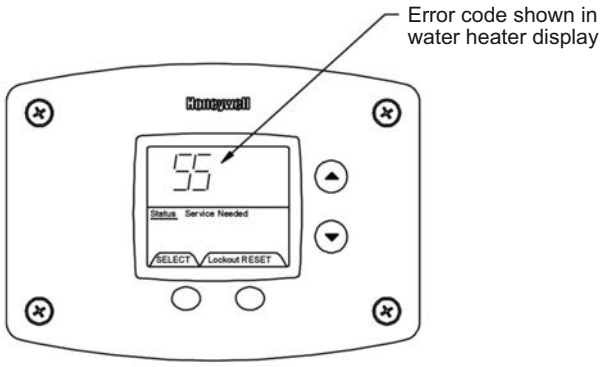

Example of error code shown on control display

10.4.1 Using control display for servicing the water heater

ACCESSING SERVICE MODE ON THE WATER HEATER DISPLAY (FOR SERVICE PERSONNEL ONLY)

The display has a “service mode” for changing the maximum setpoint and accessing information in aiding servicing of the water heater. This procedure is for service and installation personnel only. To enter the Service Mode, follow the steps illustrated below:

Fig. 41

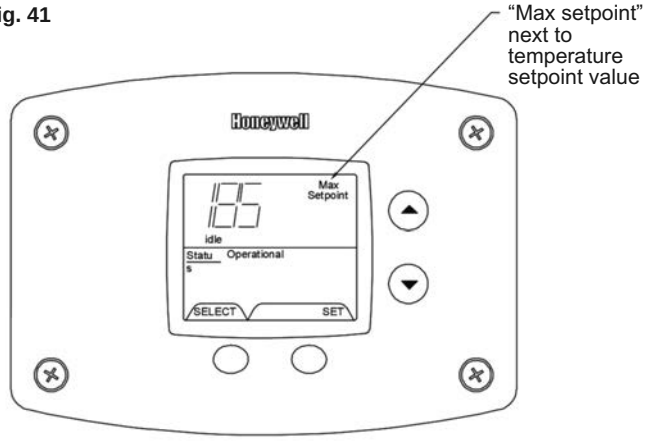

Step 1: Press “Select” and “Temperature Up” buttons together and hold for 3 seconds until “Max Setpoint” is shown in the display.

Fig. 42

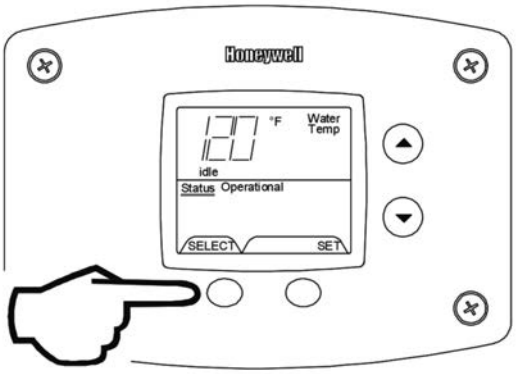

Step 2: Pressing “Select” button will change display to next mode

10.4.2 Service mode

The following is the sequence of modes available in "Service Mode" by pressing the "Select" button:

Error Code Number (Display/Reset). This is only shown if there is an operating error in the "User Mode".

Fig. 43

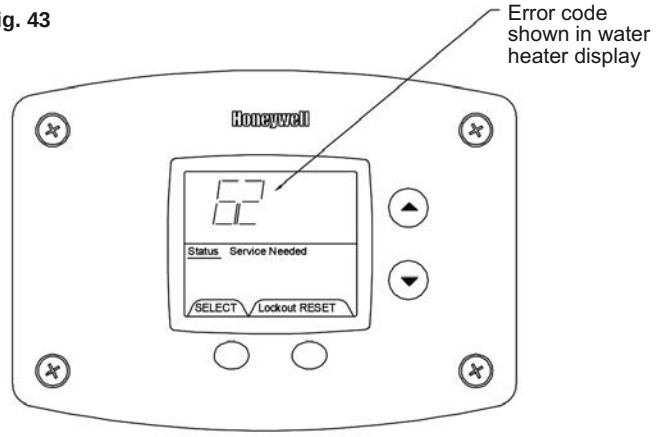

Fig. 44

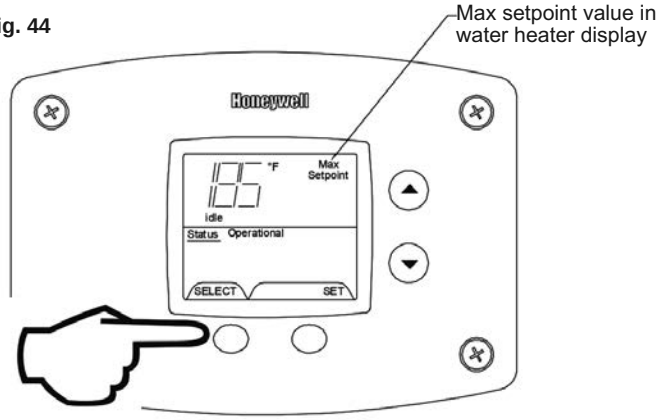

1. Max Setpoint (Display/Change)

Fig. 45

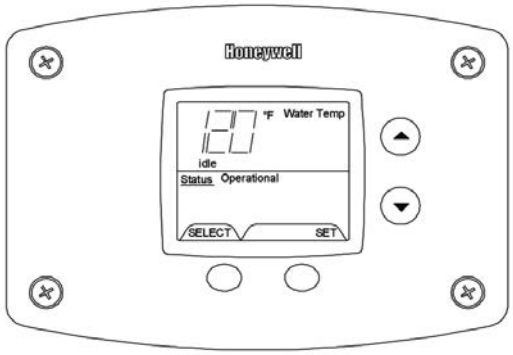

2a. Water Temperature Average (Displays average if there are two sensors - sensor temperature displayed if single sensor is used).

Fig. 46

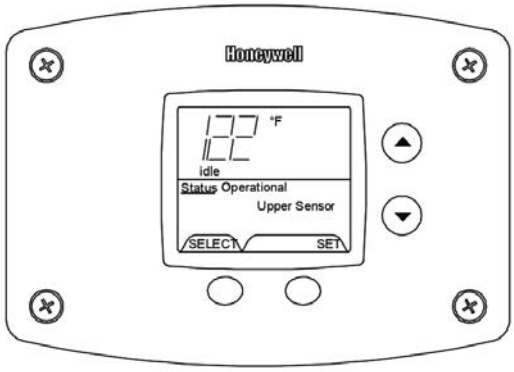

2b. Water Temperature - Upper Sensor (Displays if there is an upper sensor - some models)

Fig. 47

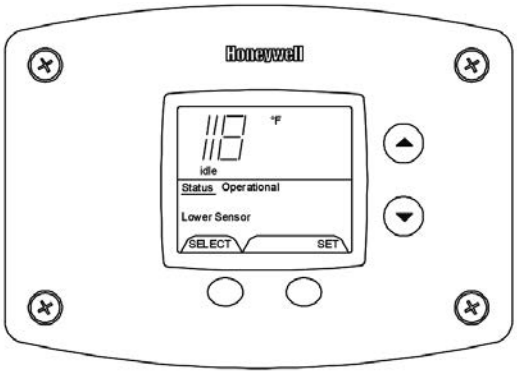

2c. Water Temperature - Lower Sensor (Displays if there are two sensors)

Fig. 48

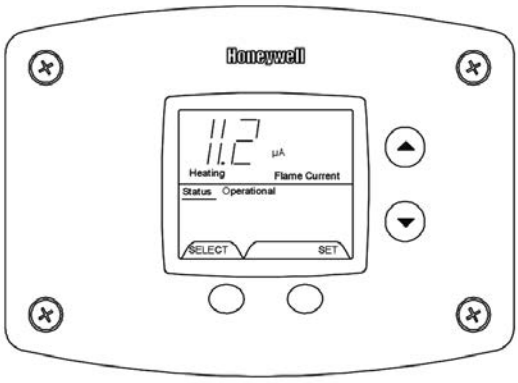

3. Flame Current of Pilot Flame Sensor (Displays only in the Heating Cycle)

Fig. 49

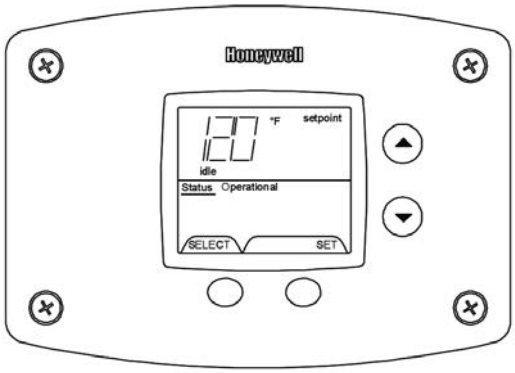

4. Setpoint (Display/Change)

Fig. 50

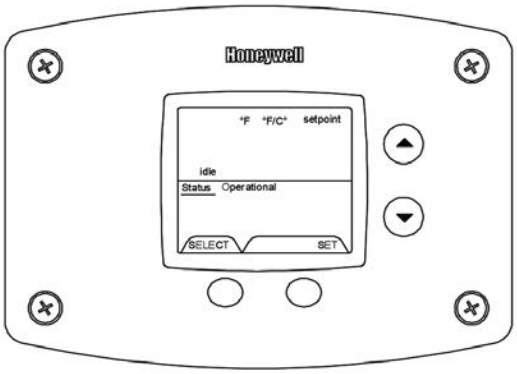

5. °F/°C (Display/Change)

Fig. 51

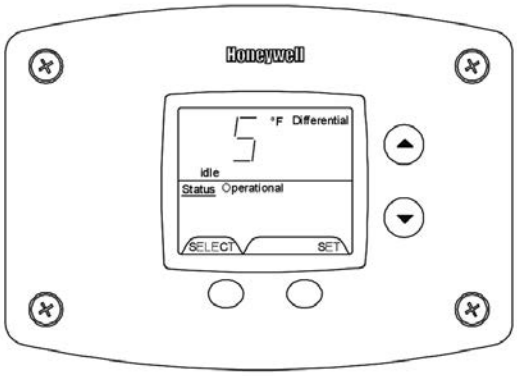

6. Differential (Display only - shows the differential of the thermostat)

Fig. 52

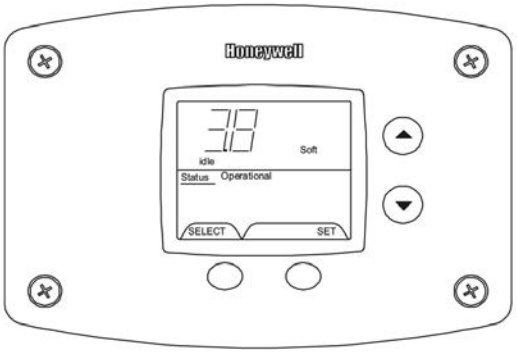

7. Software Version (Display only)

Fig. 53

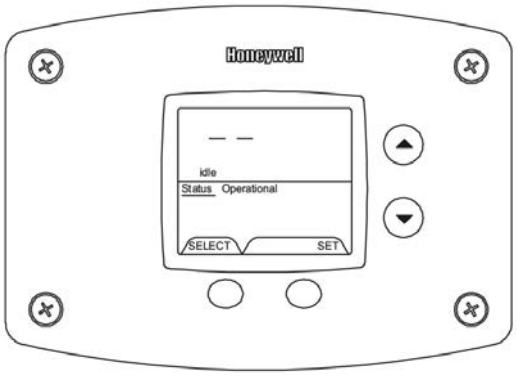

8. Error Code History (Displays if there are present error codes or up to 10 previous error codes). Water Heater Display will show a “--“ if there are no error codes.

Warning
Setting the water temperature to the maximum set point can result in scalding hot water delivered to the taps. It is highly recommended that the maximum setpoint be adjusted to the lowest temperature possible for the needs of the installation. Make sure the water heater control display is not in a public area that can result in the temperature settings being improperly adjusted.

10.4.3 To change the maximum setpoint limit (max setpoint) for the temperature setpoint:

Fig. 54

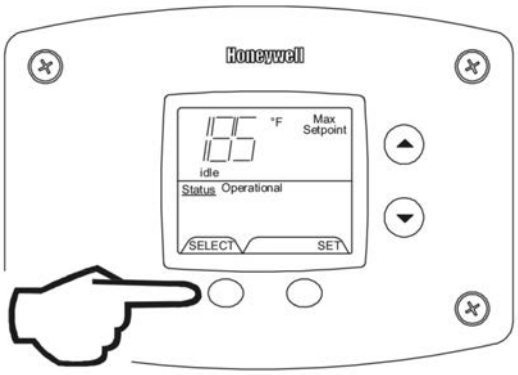

Step 1: In service mode press the “Select” button until “Max Setpoint” is displayed.

Fig. 55

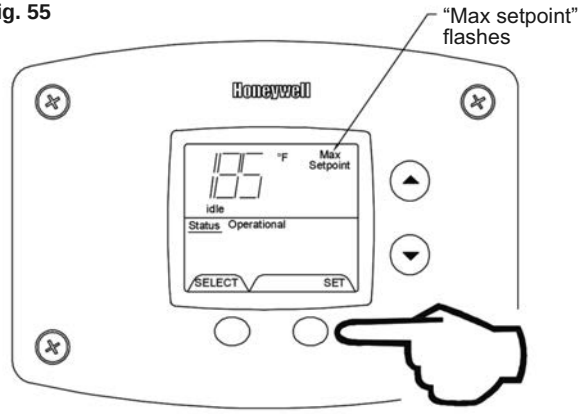

Step 2: Press “Set” button to enter setting mode. “Max Setpoint” will flash to indicate setting mode.

Fig. 56

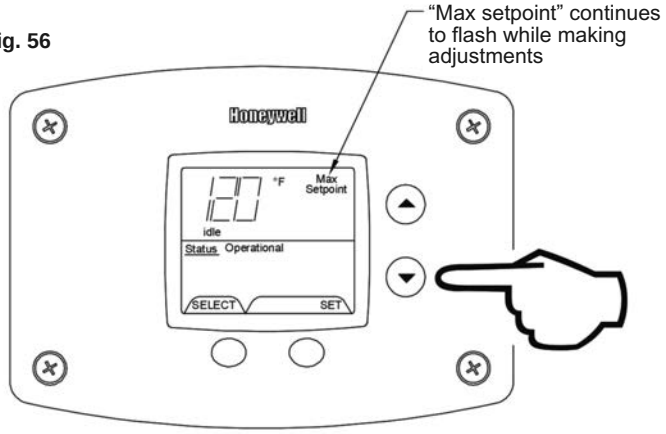

Step 3: Press the “UP” or “DOWN” buttons to change the maximum setpoint value. This will limit the maximum setpoint the user can select. Note: The maximum setpoint is approximately 180°F.

Fig. 57

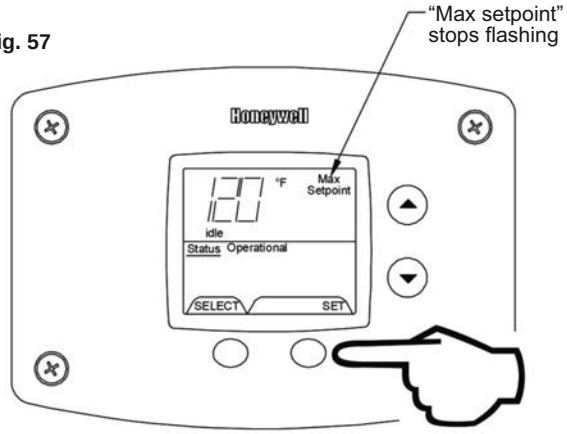

Step 4: Press “Set” button to confirm new “Max Setpoint” value and stop setting mode.

Fig. 58

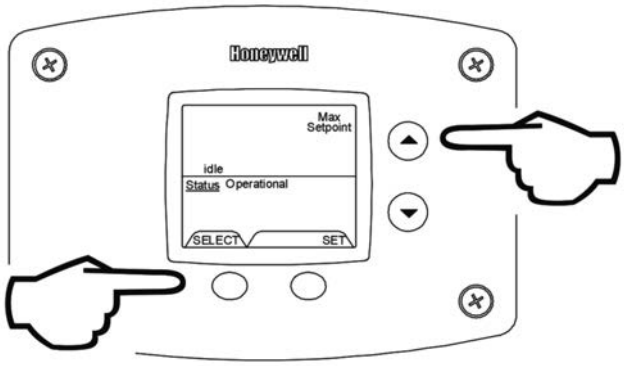

Step 5: 30 Seconds after the last button press, the Water Heater Display will go back to “User Mode”. It will read “Max Setpoint” without showing a temperature value if the temperature setpoint is at the maximum setting. The Water Heater Display can be set back to the “User Mode” immediately by pressing both the “Temperature Up” and “Select” buttons together for 3 seconds.

Exiting Service Mode

Fig. 59

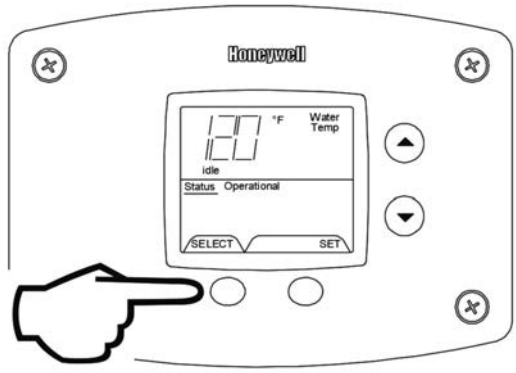

10.4.4 Display of water temperature

Step 1: In Service Mode, Press the “Select” button until “Water Temp” is displayed in the upper right section of the water heater display. For water heaters using two temperature sensors in the tank, this will be the average reading between the two sensors. For water heaters using a single sensor, this is the reading for the sensor.

Fig. 60

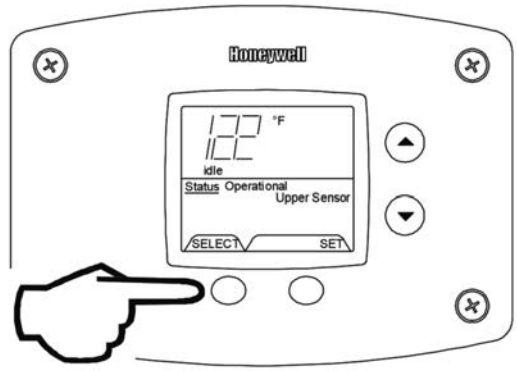

Step 2: For water heaters using two temperature sensors, pressing the “Select” button again displays the Upper Sensor temperature reading. “Upper Sensor” will be displayed in the lower right side of the status window of the water heater display.

Fig. 61

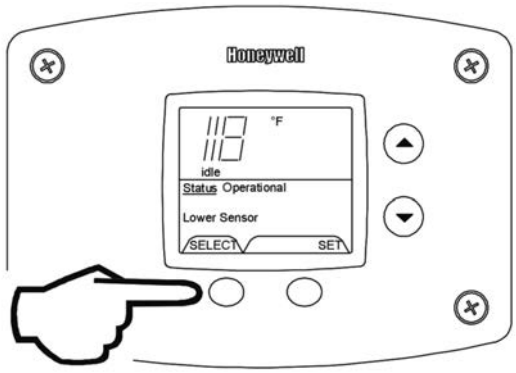

Step 3: For water heaters using two temperature sensors, pressing the “Select” button again displays the Lower Sensor temperature reading. “Lower Sensor” will be displayed in the lower left side of the status window of the water heater display.

Fig. 62

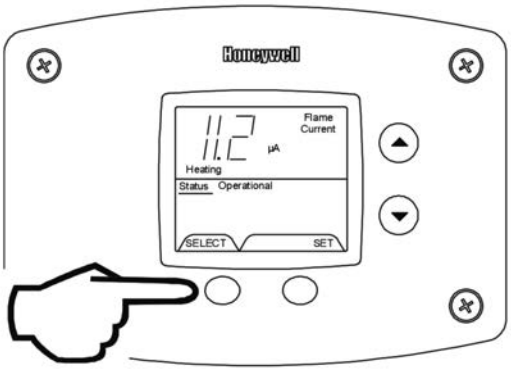

10.4.5 To display flame sense current of the pilot flame sensor

The pilot flame sense current is available only when the burners are in operation. Step 1: Make sure the status displays “Heating” or draw enough hot water to start the burners. Step 2: Enter the “Service Mode” described previously. Step 3: Press the “Select” button until a number value is displayed with “Flame Current” to the right of the number. The value displayed is in microamps (µA).

Fig. 63

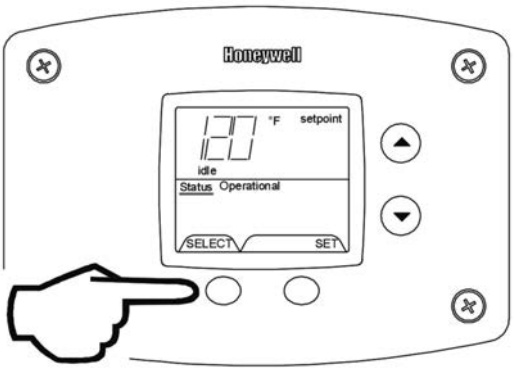

10.4.6 To display and change temperature setpoint

Step 1: In “Service Mode” press the “Select” button until “Setpoint” is shown in the water heater display

Fig. 64

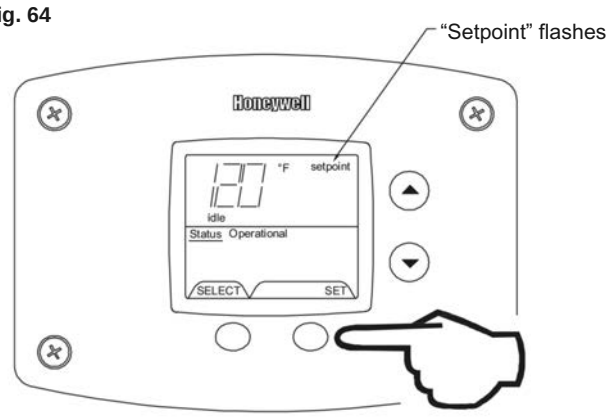

Step 2: Press the “Set” button to enter the setting mode. “Setpoint” will flash in the water heater display.

Fig. 65

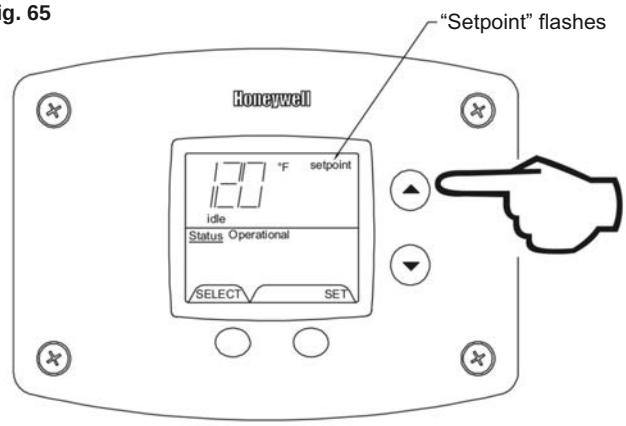

Step 3: To raise the temperature setpoint, press the “Temperature Up” button until the desired temperature is shown on the water heater display.

Note
The maximum temperature that can be set in the Water Heater Display is limited to the “Max Setpoint” described previously. To change the “Max Setpoint”, refer to the procedure “To Change the Maximum Setpoint Limit..." described previously under “Accessing the Service Mode on the Water Heater Display”.

Warning
Setting the water temperature to the maximum set point can result in scalding hot water delivered to the taps. It is highly recommended that the maximum setpoint be adjusted to the lowest temperature possible for the needs of the installation. Make sure the water heater control display is not in a public area that can result in the temperature settings being improperly adjusted.

Fig. 66

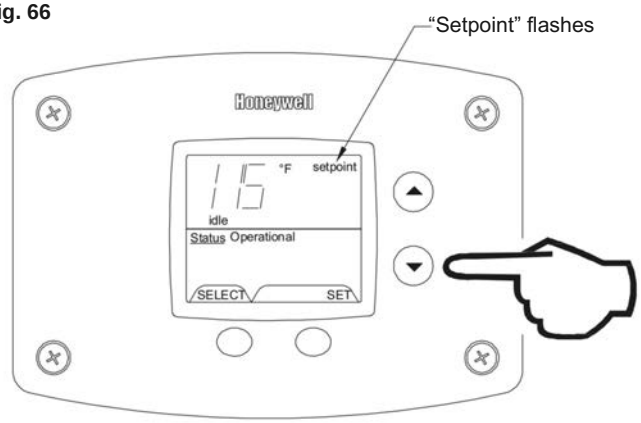

Step 4: To lower the temperature setpoint, press the "Temperature Down" button until the desired temperature is shown on the water heater display.

Fig. 67

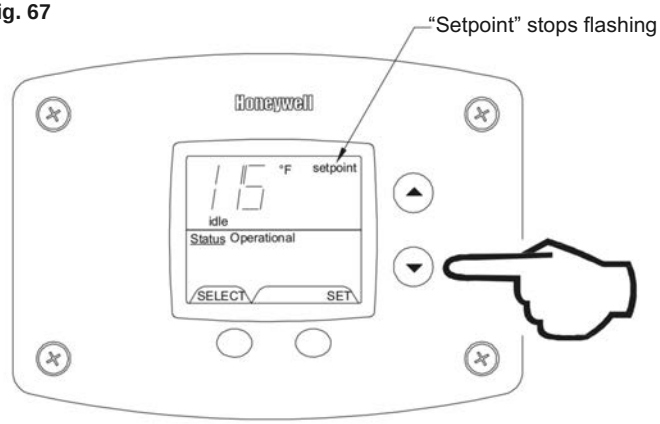

Step 5: When the desired setpoint is reached on the water heater display, press the "Set" button to confirm the new setpoint. "Setpoint" stops flashing in the water heater display.

10.4.7 To display and change temperature format (°F/°C)

To change temperature format in display from °F to °C or °C to °F:

Fig. 68

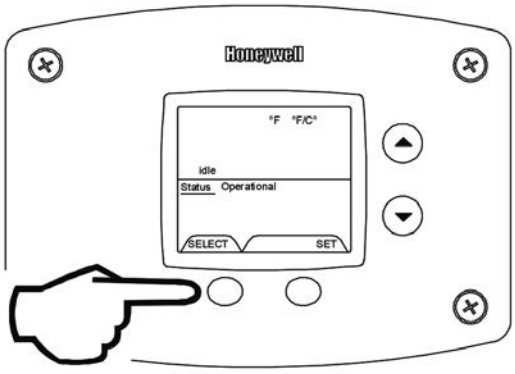

Step 1: While in "Service Mode", press "Select" button until "°F/°C" is shown in the upper right portion of the water heater display.

Fig. 69

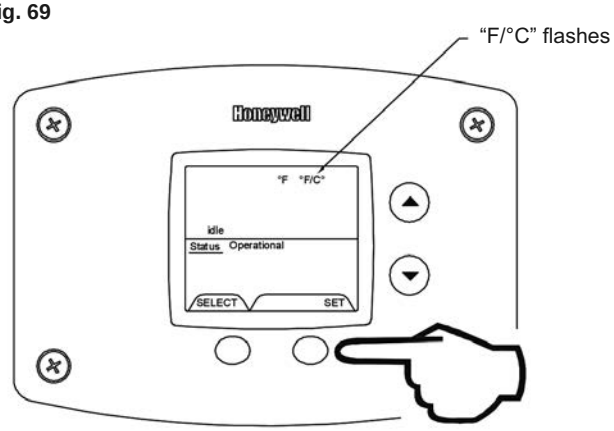

Step 2: Press "Set" button to change temperature format. "°F/°C" symbol will flash in the water heater display.

Fig. 70

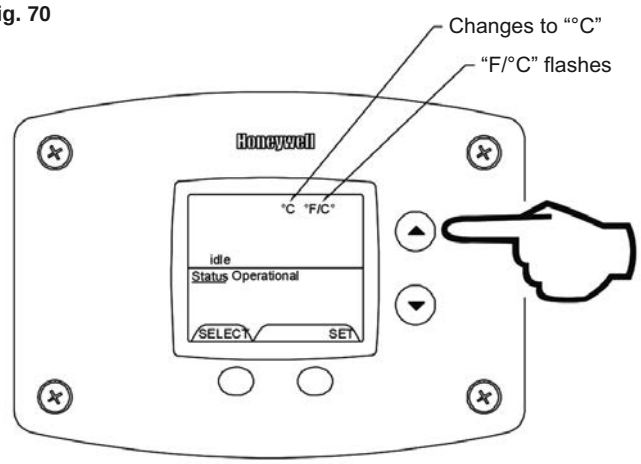

Step 3a: Press “Temperature Up” button to change temperature format to °C

Fig. 71

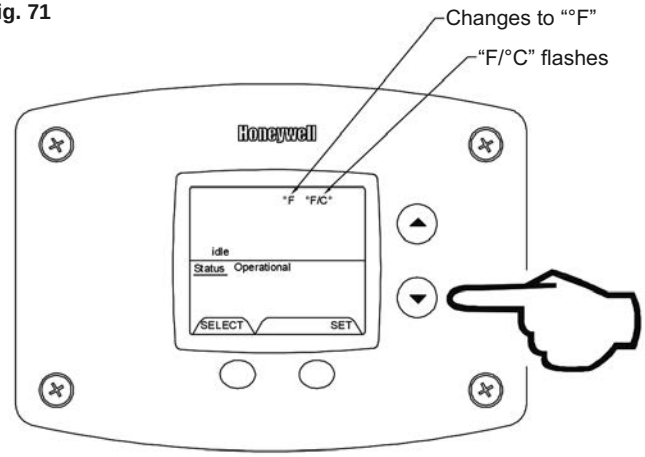

Step 3b: Press “Temperature Down” button to change temperature format to °F

Fig. 72

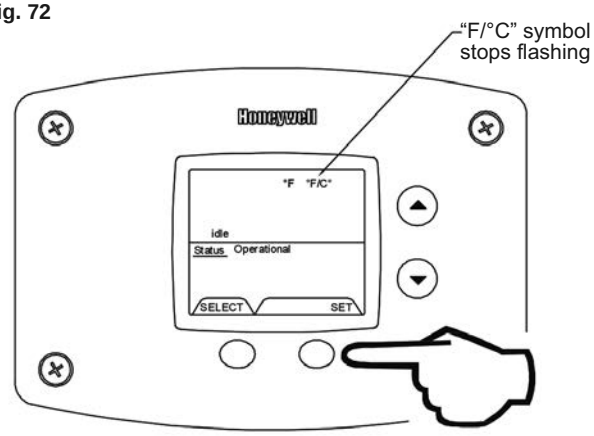

Step 4: Press “Set” button to confirm °F or °C format. °F/°C will stop flashing

Fig. 73

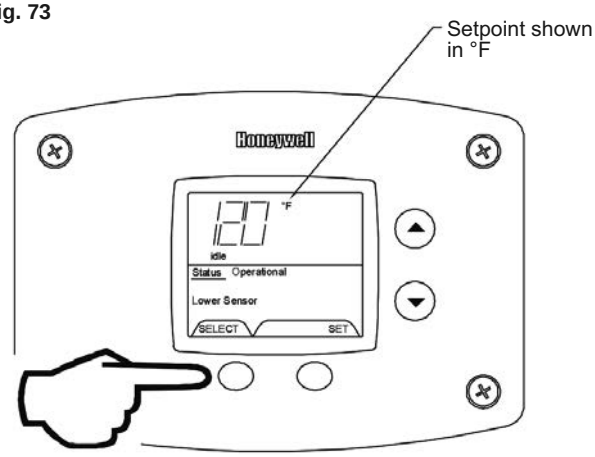

Step 5: Pressing “Select” button will return display to setpoint in format selected (°F or °C) immediately

Fig. 74

Example of Error Code in the Display

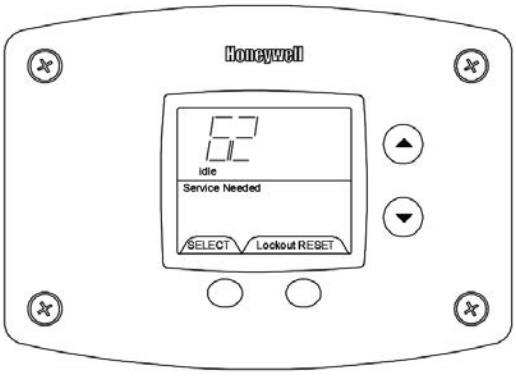

10.4.8 Error codes and error history display

If there is an operating problem with the water heater, an error code number will appear on the water heater display with “Service Needed” to the right of the “Status” indicator. The error code label is located under the water heater display. The following section in this Service Manual explains the error codes with corrective actions to repair the water heater.

10.4.9 Error code history

In “Service Mode” pressing the “Select” button after the “Software Version” (item 8 in the previously described sequence of service modes) will show an error code history, if there have been any previous operating problems with the water heater. If the display shows --, there is not a current error code.

The Water Heater Display will provide up to 10 previous error codes. The oldest error code will be stored in code index #1 and the most recent in code index #10.

10.4.10 To view previous error codes

Fig. 75

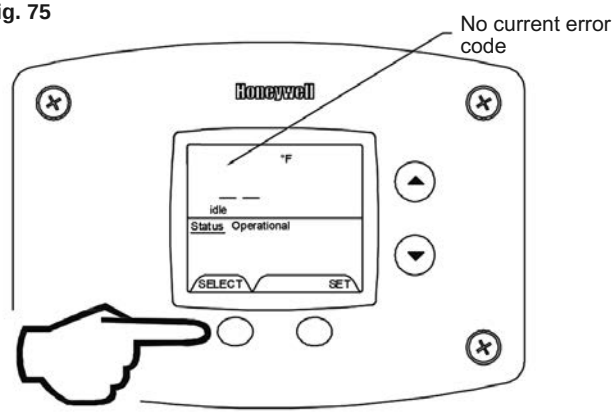

Step 1: In “Service Mode press the “Select” button until the next display after the “Software Version”. If there are no current error codes, the display will show -- .

Fig. 76

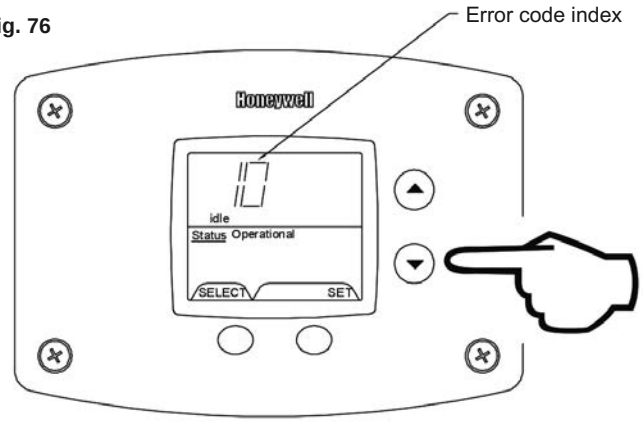

Step 2: Press the “Temperature Down” button to select the error code index, starting with the most recent error code “10”.

Fig. 77

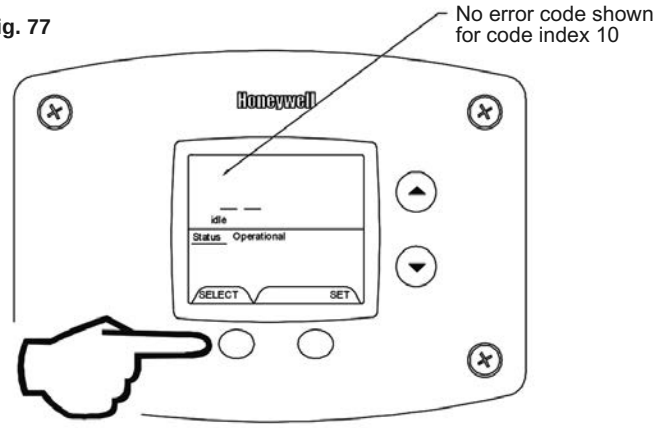

Step 3: Press the “Select” button to view the error code for “code 10”. If there is a number displayed, note what the number is.
The label next to the water heater display will identify the code number. If no number is displayed with only a water heater display, then there has not been an error code for error code index 10.

Fig. 78

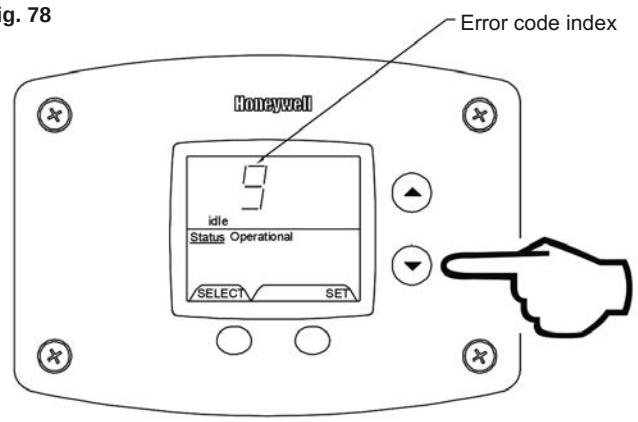

Step 4: Press the “Temperature Down” button to change to the previous code index, code #9.

Fig. 79

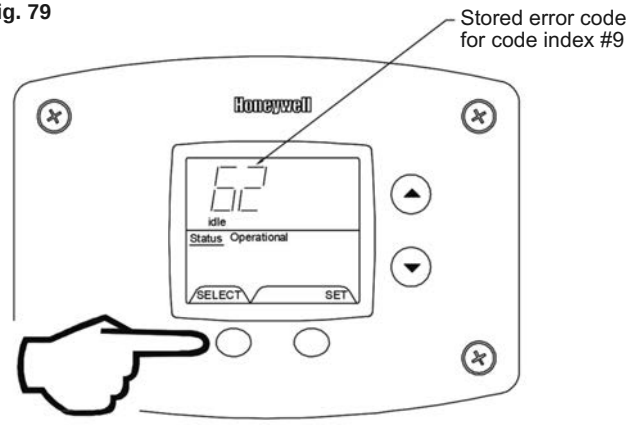

Step 5: Press the “Select” button for code index #9 to view if there are any code numbers.

Fig. 80

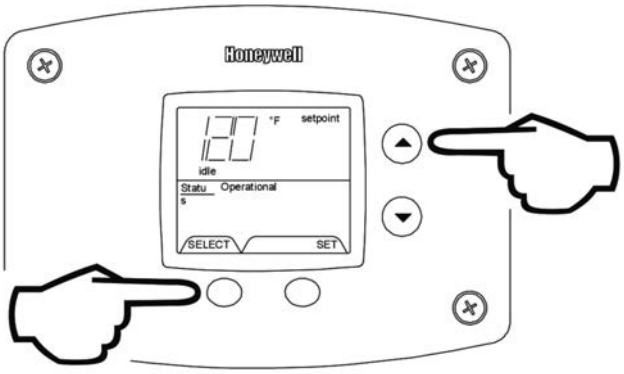

Exiting Service Mode

Step 6: Continue pressing the “Temperature Down” button to change to the next error code index and press “Select” to view the error code number, if any, for that index number. Continue on to index #1, the oldest error code index. The water heater display will store up to 10 error codes with the oldest code starting in code index #1 with the most recent code in code index #10.

Step 7: 10 seconds after the last button press, the Water Heater Display will revert back to the current error code display. To exit Service Mode, either wait 30 seconds or press Temperature Up button and Select Button for 3 seconds.

10.4.11 Error code definitions

If the water heater has an operating problem, there will be a number in the water heater display with “Service Needed” shown below the error code number. Note the error code and the definition in the chart below. This label appears on the control box under the water heater display. The following sections will provide instructions for servicing each error code.

Honeywell Integrated Control Error Code Display for 24 Volt Damper Models	
Error Code	**Definition**
4	Low flame sense current
55	Damper end switch failed to close (stuck open)
56	Damper end switch failed to open (stuck closed)
6	Flame sensed out of normal sequence (before opening gas valve or after closing gas valve)
23	Flame detected before ignition
24	Flame detected after a heating cycle completes
31	Upper sensor readings faulty
32	Lower sensor readings faulty
57	Flame rod shorted to ground
58	AC line frequency error - signal too noisy or frequency incorrect
59	Line voltage too low or high
61	DC output voltage unstable
62	Maximum number of retries detected
63	Maximum number of ignition recycles detected
64	Electronics Failure
65	High water temperature (over 200°F)
If any of the above codes appear on the control display, contact your plumber or qualified service agent for service of this water heater.	

10.4.12 Resetting lockout conditions

Warning
The following procedure is for service and installation personnel only. Resetting lockout conditions without correcting the malfunction can result in a hazardous condition.

If an error code is displayed (except for #4, low flame sense current), the water heater will be in a “lockout condition” with the water heater display showing the error code number and “Service Needed” in the status section of the display window. Error codes 62 (maximum number of retries detected) and 63 (maximum number if ignition recycles detected) are “Soft Lockouts” in which the control can be reset in the “User Mode” by pressing the lower right button under “Lockout Reset” shown in the lower right portion of the display. The control will also go through 3 attempts to relight the burners every hour in the soft lockout condition.

All other error codes will put the water heater into a “Hard Lockout” condition, in which the water heater will not operate and cannot be reset in the “User Mode”. To reset a hard lockout, first enter the “Service Mode” described earlier by pressing both the “Temperature Up” and “Select Buttons” at the same time for 3 seconds. Then press the lower right button under “Lockout Reset” in the water heater display and hold for 3 seconds.

Fig. 81

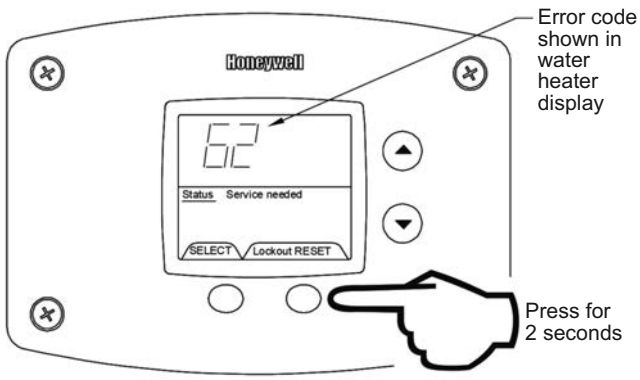

10.4.13 Resetting error codes in hard lockout condition

Step 1: Press for 3 seconds to enter service mode.

Fig. 82

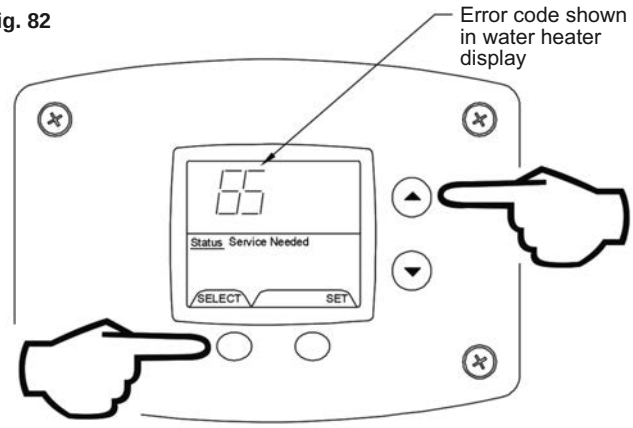

Fig. 83

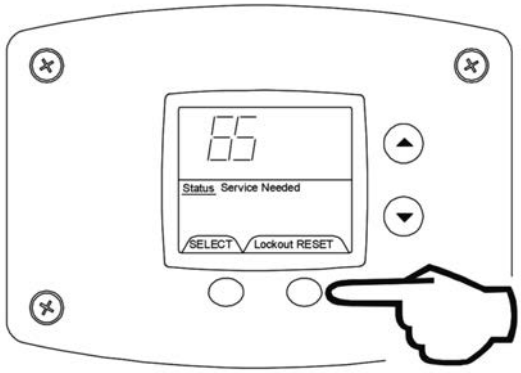

Step 2: Press for 3 seconds to reset control in service mode.

10.5 Service procedure D24-I

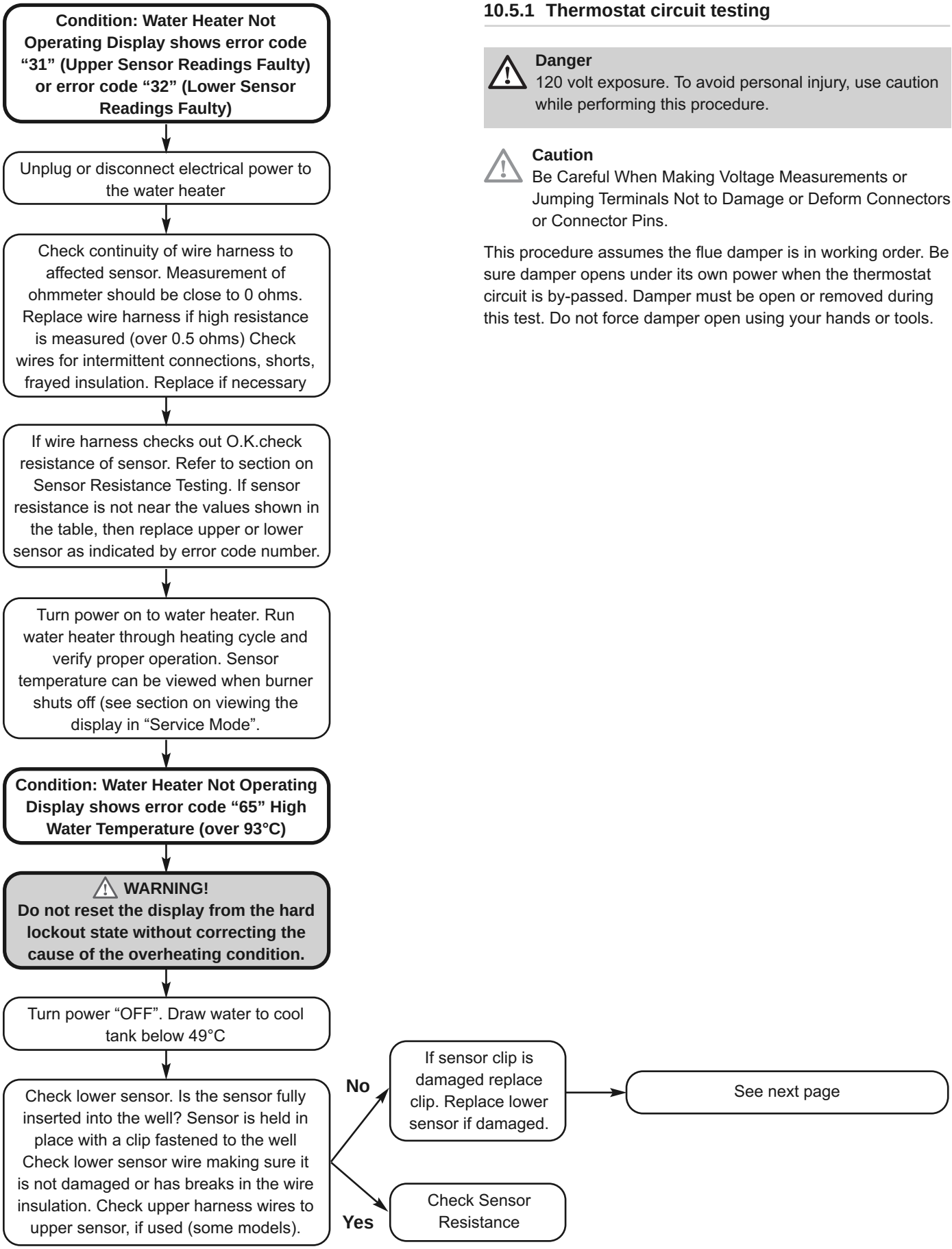

10.5.1 Thermostat circuit testing

Danger
120 volt exposure. To avoid personal injury, use caution while performing this procedure.

Caution
Be Careful When Making Voltage Measurements or Jumping Terminals Not to Damage or Deform Connectors or Connector Pins.

This procedure assumes the flue damper is in working order. Be sure damper opens under its own power when the thermostat circuit is by-passed. Damper must be open or removed during this test. Do not force damper open using your hands or tools.

Warning
Do not operate water heater without verifying that the overheating condition has been corrected.

From previous page

Condition: Water Heater Not Operating Display shows error code "65" High Water Temperature (over 93°C) Continued

Once cause of overheating condition has been diagnosed and corrected, the control may be reset

- Reconnect and switch on power to the water heater.
- Enter service mode on the water heater display
- Press button under "Lockout Reset" and hold for 3 seconds.
- Set thermostat to the desired setting.
- Water heater should start.
- Monitor temperatures for one complete heating cycle making sure the maximum tank temperature remains well below 93°C

This water heater is equipped with a manual reset type gas shutoff device designed to shut off the gas to the burners if excessive water temperature occurs. To reset the control, first press the "temperature up" and "select" buttons on the water heater display for 3 seconds to enter service mode. Then press the lower right button under "RESET" in the display for 3 seconds.

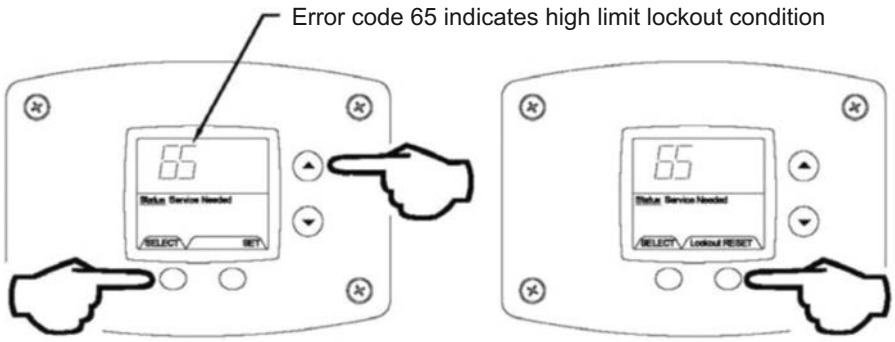

Step 1: Press for 3 seconds to enter service mode.

Step 2: Press for 3 seconds to reset control.

Conditions: Upper or Lower Sensor Reading Faulty, High Water Temperature, or suspect thermostat is not accurate.

Fig. 85

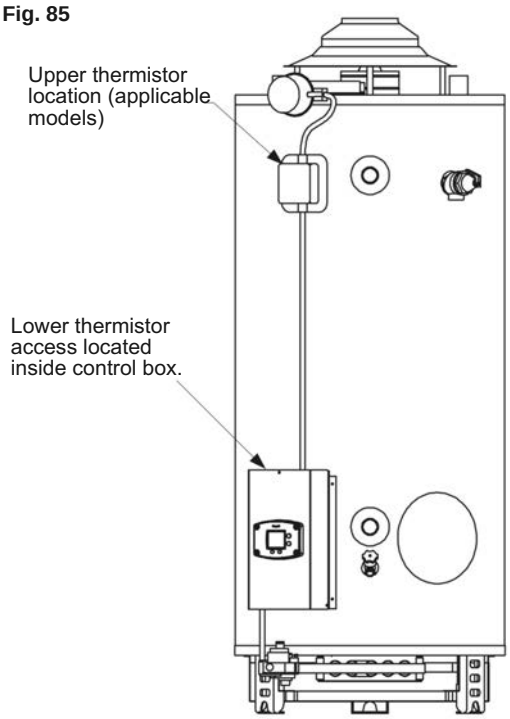

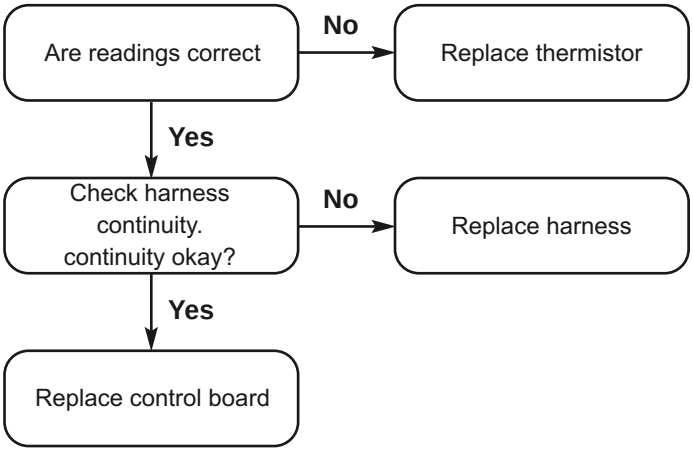

10.5.2 Sensor resistance testing

Upper Sensor

1. Determine resistance value of upper sensor. Test across grey wires.
2. Draw quart of water off **T&P valve**. Using a thermometer, determine water temperature.
3. Use table below to verify correct resistance per water temperature measured.

Lower Sensor:

1. Determine resistance value of lower sensor. Test across center wire (common) to each outside wire. Resistance of both thermistors in the lower sensor should be close to each other. If the resistance values for both thermistors are not close to each other, replace the lower sensor. The dual thermistors are used to provide high limit protection in case the thermostat circuit fails to shut off the water heater.
2. Draw quart of water off **Drain Valve**. Using a thermometer, determine water temperature.
3. Use table below to verify correct resistance per water temperature measured.

Caution
Be Careful When Making Resistance Measurements Not to Damage or Deform Connectors or Connector Pins.

10.5.3 Sensor resistance at various temperatures

Example: If water temperature is 26.7°C, then the resistance through the sensor would be 8449 (see shaded area).

Note
Sensor resistance increases as the temperature falls.

In Degrees C										
°C	0	1	2	3	4	5	6	7	8	9
4.5	26109	25400	24712	24045	23399	22771	22163	21573	21000	20445
10	19906	19383	18876	18383	17905	17440	16990	16553	16128	15715
15.5	15314	14925	14548	14180	13823	13477	13140	12812	12494	12185
21.1	11884	11592	11308	11032	10763	10502	10248	1000	9760	9526
26.7	9299	9078	8862	8653	8449	8250	8057	7869	7685	7507
32	7333	7165	7000	6839	6683	6531	6383	6238	6098	5961
37	5827	5697	5570	5446	5326	5208	5094	4982	4873	4767
44	4663	4562	4464	4368	4274	4183	4094	4006	3922	3839
49	3758	3679	3602	3527	3453	3382	3312	3244	3177	3112
55	3048	2986	2925	2866	2808	2752	2697	2643	2590	2538
60	2488	2439	2391	2344	2298	2253	2209	2166	2124	2083
65.5	2043	2004	1966	1928	1891	1856	1820	1786	1753	1720
71	1688	1656	1625	1595	1566	1537	1509	1481	1454	1427
76	1402	1376	1351	1327	1303	1280	1257	1235	1213	1191
82	1170	1150	1129	1110	1090	1071	1053	1035	1017	999
88	982	965	949	933	917	901	886	871	857	842
93	828	814	801	788	775	762	749	737	725	713

10.6 Service procedure D24-II

10.6.1 Pilot operation testing

Danger
120 volt exposure. To avoid personal injury, use caution while performing this procedure.

Caution
Be Careful When Making Voltage Measurements or Jumping Terminals Not to Damage or Deform Connectors or Connector Pins.

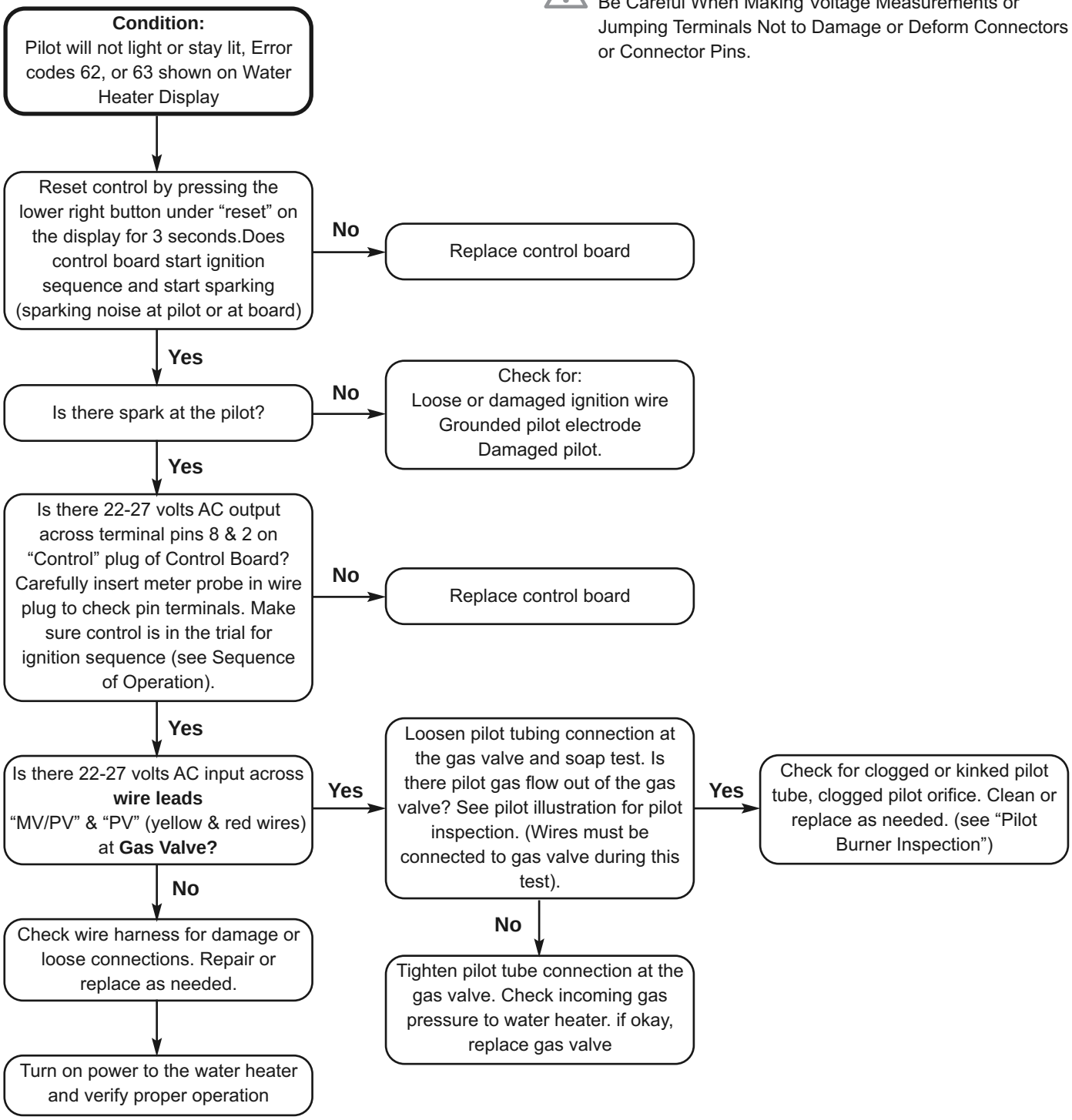

10.6.2 Pilot inspection

Condition:
Error code 57: Flame Rod Shorted to Ground

Disconnect power. Shut off gas supply to water heater. Slide out burner assembly **(see section on "removing pilot and main burner assembly").**

Check to see if pilot shield is touching pilot flame sensor or flame sensor touching pilot hood. Bend shield to prevent interference or replace pilot shield.

Check pilot flame sense wire for broken insulation. Replace pilot if defective

Reinstall pilot and burner assembly. Reconnect gas line union, turn on gas.

Check for Gas Leaks

Reconnect power and verify proper ignitions.

Fig. 86

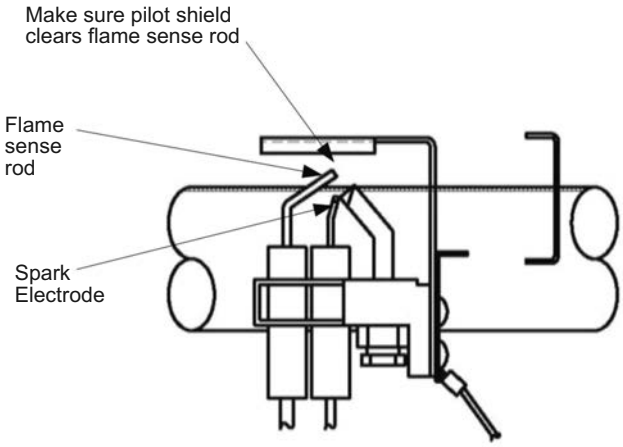

10.6.3 Pilot operation testing

Danger
120 volt exposure. To avoid personal injury, use caution while performing this procedure.

Caution
Be Careful When Making Voltage Measurements or Jumping Terminals Not to Damage or Deform Connectors or Connector Pins.

Condition:
Pilot lights, no or low flame signal. Control Display shows “4” or “62” for Error Codes (Service Needed). Control continues to spark until system “Lock Out”. Main burner will not light.

↓

Check for loose or damaged flame sense lead from pilot to Control Board. (see illustration to the right). Is flame sense lead okay?

No → Repair wire lead or replace pilot.

Yes ↓

Check for loose or damaged ground wire(s) from gas valve to control board. Check continuity of wires with ohmmeter. Are ground wires okay?

No → Repair ground wire(s) or replace as needed.

Yes ↓

Check venting conditions or negative pressure. Is vent system okay?

No → Correct improper venting condition. Refer to Installation Instructions

Yes ↓

Is heater condensing causing pilot interruption?

Yes → Make sure pilot shield is in place and not bent or damaged (refer to section on main burner and pilot assembly) . Determine cause for condensing and correct. (Possible under sized water heater or high demand periods.)

No ↓

The microamp output of the pilot may be checked by entering “Service Mode” on the water heater display and pressing “Select” until the flame current is shown. The control must be in the heating mode with the pilot lit to display a reading. See section on accessing service mode on the water heater display.

→ NOTE:
Check continuity of sense lead to flame rod.If no continuity, clean pilot flame rod or replace pilot. Check pilot flame appearance - if weak check for clogged pilot orifice, bent pilot tubing, or low inlet gas pressure. (see above illustration)

↓

Micro-amp readings

0.000 Micro Amp =	Replace control board or pilot if wire is damaged.
1.0 micro amp or less =	Clean pilot flame rod or replace pilot.

Fig. 87

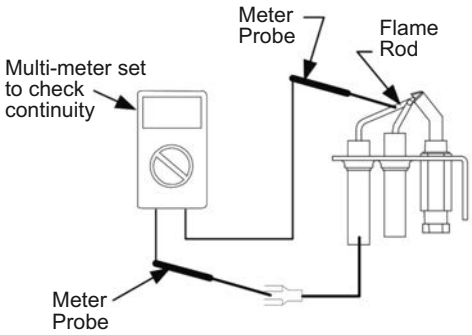

Checking pilot flame sensor wire and flame rod for continuity.

Fig. 88

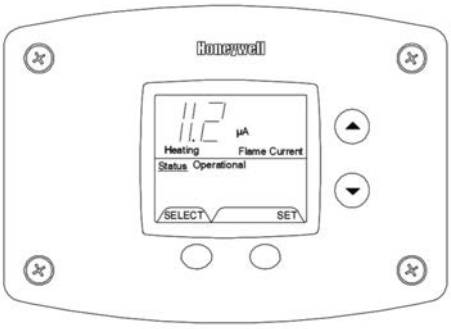

Pilot flame sensor microamp output shown in display using service mode. Pilot must be lit to get reading.

10.7 Service procedure D24-III

10.7.1 Main burner operation testing

Danger
120 volt exposure. To avoid personal injury, use caution while performing this procedure.

Caution
Be Careful When Making Voltage Measurements or Jumping Terminals Not to Damage or Deform Connectors or Connector Pins.

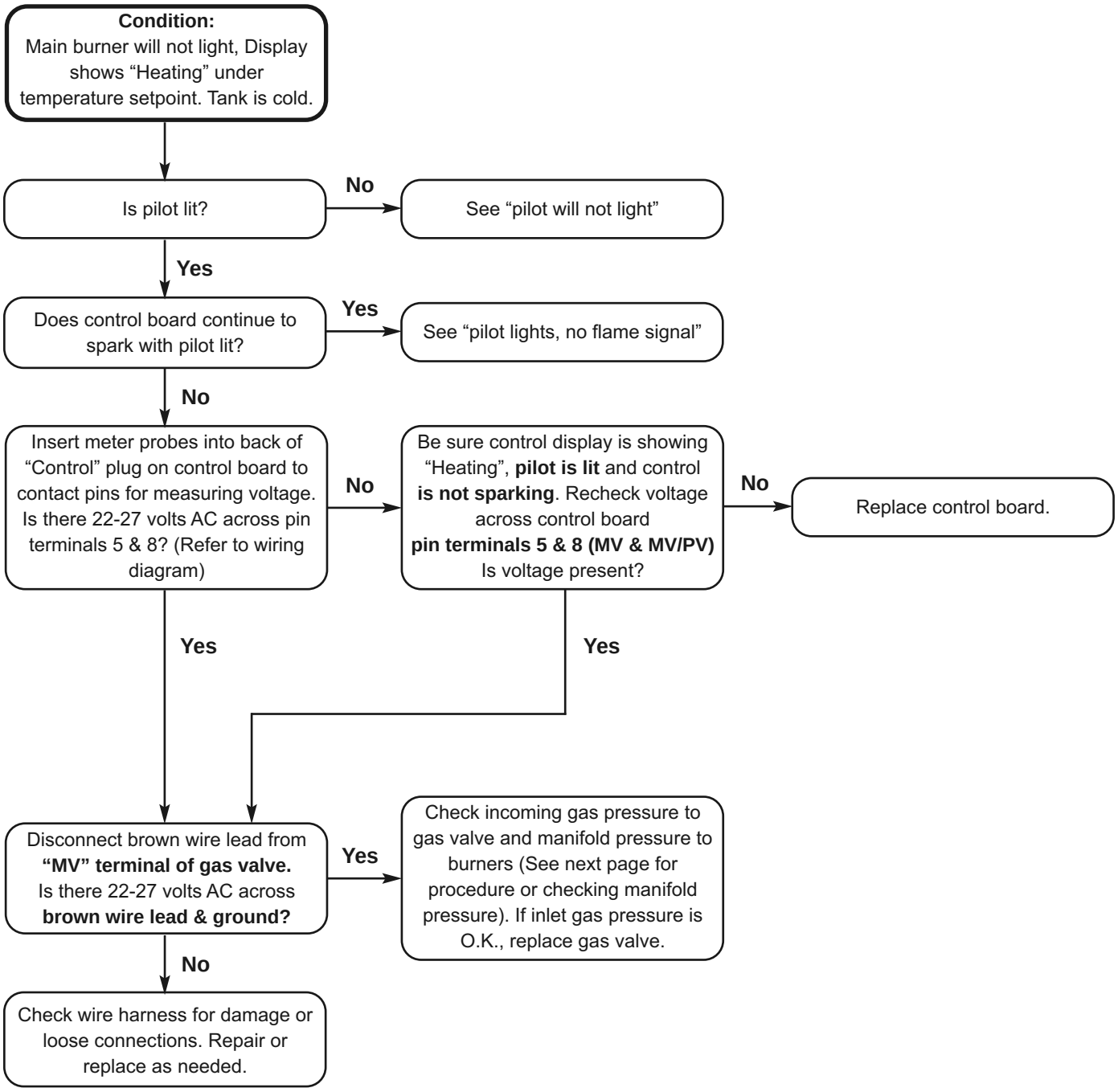

10.7.2 Checking manifold pressure

Danger
120 volt exposure. To avoid personal injury, use caution while performing this procedure.

Caution
Be Careful When Making Voltage Measurements or Jumping Terminals Not to Damage or Deform Connectors or Connector Pins.

Condition:
Main burner short cycles. Control Display may show error code “63, 57, or 4” and be in “Soft Lockout” state.

↓

Check gas inlet pressure to the water heater gas valve. Line pressure should be:
Nat.=Min. 5.5"W.C.: Max. 14.0"W.C.
LP=Min. 11.0"W.C.; Max. 14.0"W.C.
Is gas pressure within proper specification?

No → Determine cause of incorrect gas pressure and correct. Contact your gas supplier.

Yes ↓

Check manifold pressure. Refer to water heater rating label for specified manifold pressure. If the manifold pressure is not within 0.3" w.c. of the specified pressure, then remove the regulator cap from the gas valve and turn plastic screw clockwise to increase pressure and counterclockwise to decrease pressure. Be sure inlet gas pressure is at least 1" w.c. above the manifold pressure. Replace regulator screw and pressure tap cap when finished. Is manifold pressure O.K.?

No → Replace gas valve.

Yes ↓

Check venting conditions, clogged vent, down drafts or negative building pressure Is vent system okay?

No → Correct improper venting condition. Refer to Installation Instructions

Yes ↓

Is there sufficient combustion air being supplied to the water heater? Are there combustion air openings or supply pipes to the room? Open access door to the utility room to see if problem is corrected.

No → Provide proper combustion air to water heater. Refer to Installation Instructions

Yes ↓

Check for unstable pilot flame or oxidation of the flame rod on pilot causing weak pilot signal. Make sure pilot shield is in place and does not touch pilot flame sensor. (See Pilot Inspection section)

↓

Check burner tubes for scale or debris build-up. Clean burner as necessary. (see Main Burner and Pilot Removal and Inspection)

↓

Check tank flues for blockage or debris build-up causing restriction. (see Flue Baffle Removal, Inspection)

10.8 Service procedure D24-IV

10.8.1 Main burner & pilot removal and inspection

Warning
Heater components may be HOT when performing the following steps in this procedure. Take necessary precaution to prevent personal injury.

Main burner removal

Step 1. Disconnect (un-plug) water heater from electrical supply.

Step 2. Turn “OFF” gas supply to water heater.

Step 3. Rotate gas valve control knob to the “OFF” position.

Step 4. Disconnect Gas supply line from the gas valve.

Step 5. Disconnect wire leads from gas valve.

Step 6. Disconnect white flame sense wire & orange ignition wire from Control Board.

Step 7. Remove the two burner rack mounting screws.

Step 8. Slide complete burner rack out from heater.

Step 9. To install burner, reverse above procedure.

Step 10. Check for gas leaks and verify proper operation.

Main burner inspection

Step 1. Burner tubes should be free of any flue scale or other debris. Clean burner tubes using a stiff brush and/or shop vac. Burner ports should have uniform openings. Replacement is recommended for burners where port area is deteriorated or other unintended openings are present.

Step 2. Insure pilot shield is in place.

Step 3. Inspect pilot position to insure smooth burner ignition from pilot flame. Pilot should be mounted using the two mounting screws through the burner support bracket resulting in a level
pilot position.

Pilot burner removal

Step 1. With burner rack removed from heater, disconnect pilot tube connection from gas valve

Step 2. Remove the two pilot burner mounting screws securing the pilot and pilot shield in place.

Step 3. Remove pilot shield and pilot from burner rack.

Step 4. To install pilot burner and pilot shield, reverse above procedure. Be sure to reconnect green ground wire.

Pilot burner inspection

Step 1. Inspect pilot for the following:

a) Broken or cracked ceramic insulators. If found, pilot must be replaced.

b) Damaged electrode or flame sense wire. If found, pilot must be replaced.

c) Oxidation build-up on flame rod. Clean flame rod or replace pilot as necessary.

Step 2. Inspect pilot orifice:

a) Remove 11mm ferrule nut from bottom of pilot.

b) Remove pilot tube and orifice from pilot.

c) Inspect pilot tube for blockage. Clean or replace as necessary.

d) Inspect pilot orifice for blockage. Clean or replace as necessary.

10.8.2 Control board replacement

Danger
120 volt exposure. To avoid personal injury, unplug while performing this procedure.

Step 1. Disconnect Power

Step 2. Unplug wire connections from board.

Step 3. To remove board, tilt control panel to the right and slide control hook tabs from slots in control panel.

Step 4. To remove lower sensor remove clip, pull sensor out.

Note
IMPORTANT When replacing lower sensor, make sure sensor is fully inserted into the well and securely held by the clip on the well groove.

10.9 Service procedure D24-V

10.9.1 Flue baffle removal and inspection

Warning
Heater components may be HOT when performing the following steps in this procedure. Take necessary precaution to prevent personal injury.

Step 1. Disconnect (unplug) water heater from electrical supply.

Step 2. Disconnect venting from draft diverter and remove draft diverter from top of water heater.

Step 3. Disconnect flue damper from wire harness and remove flue damper from top of water heater.

Step 4. If required, turn “OFF” water supply & disconnect top plumbing connection from top of water heater.

Step 5. Remove screws holding jacket head to top of water heater and remove jacket head from top of water heater. Note, it may be necessary to use a screw driver to pry underneath jacket head.

Step 6. Remove insulation from top of water heater to expose collector cover.

Step 7. Remove screws from side (or top) of collector cover. Note, it may be necessary to chisel away some foam to access screws.

Step 8. Remove collector cover from water heater by using pipe wrench.

Step 9. Remove flue baffles from water heater. Note, it may be necessary to use pliers to loosen and remove baffles from flue tubes.

Step 10. Visually inspect flue baffles. Flue baffles may show signs of oxidation; this is normal. If the oxidation has deteriorated any portion of the flue baffle, replacement is recommended. If any restrictors are missing, replacement is recommended.

Step 11. Upon completion of inspection or subsequent replacement, reinstall flue baffles into heater.

Step 12. Reinstall collector cover and insulation over collector cover.

Step 13. Reinstall jacket head, flue damper and draft diverter. Reconnect venting.

Step 14. Reconnect plumbing connection to top of water heater & turn on water supply if required.

Step 15. Check for leaks and verify proper operation.

10.10 Service procedure D24-VI

10.10.1 Anode removal and inspection

Warning
Heater components may be HOT when performing the following steps in this procedure. Take necessary precaution to prevent personal injury.

Step 1. Disconnect (unplug) water heater from electrical supply.

Step 2. Turn “OFF” water supply to water heater.

Step 3. Open a near by hot water faucet to relieve tank pressure.

Step 4. Connect hose to drain valve of water heater and route to an open drain. Open drain valve and drain a minimum of 5 gallons of water from the water heater. Close drain valve and disconnect drain hose from water heater.

Step 5. Disconnect venting from draft diverter and remove draft diverter from top of water heater.

Step 6. Disconnect flue damper from wire harness and remove flue damper from top of water heater.

Step 7. If required, turn off water supply and disconnect top plumbing connection from top of water heater.

Step 8. Remove screws holding jacket head to top of water heater and remove jacket head from top of water heater. Note, it may be necessary to use a screw driver to pry underneath jacket head.

Step 9. Remove insulation from top of water heater to expose collector cover, remove if necessary. (see next page for approx. anode locations)

Step 10. Remove screws from side (or top) of collector cover. Note, it may be necessary to chisel away some foam to access screws.

Step 11. Locate and remove anode rods from top of water heater (27mm hex socket). Note, anodes located outside of the collector may require foam to be chiseled away to access anode rods. (see next page for approx. anode locations)

Step 12. Visually inspect anode rod. Anode rod may show signs of depletion; this is normal. If the anode shows signs of depletion (approximately 16mm), replacement is recommended. If any of the steel core of the anode is exposed, replacement is recommended.

Step 13. Upon completion of inspection or subsequent replacement, reinstall anode rods into water heater.

Step 14. Check for leaks.

Step 15. Reinstall collector cover & insulation over collector cover.

Step 16. Reinstall jacket head, flue damper and draft diverter. Reconnect venting.

Step 17. Reconnect plumbing connection to top of water heater if required.

Step 18. Restore water supply and power to water heater.

Step 19. Verify proper operation.

10.11 General assembly Parts table - page 98

Fig. 89

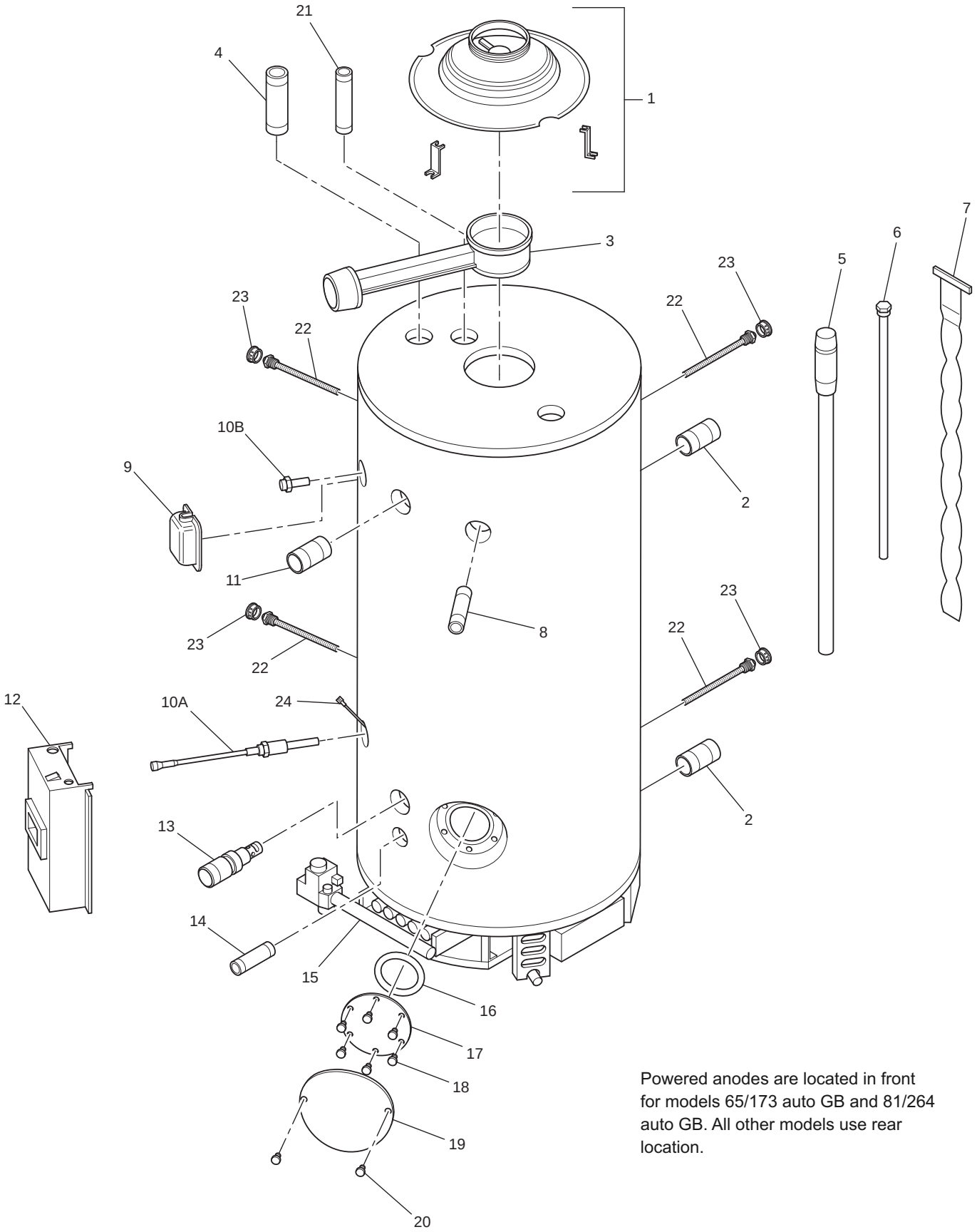

Powered anodes are located in front for models 65/173 auto GB and 81/264 auto GB. All other models use rear location.

10.12 Burner assembly Parts table - page 99

Fig. 90

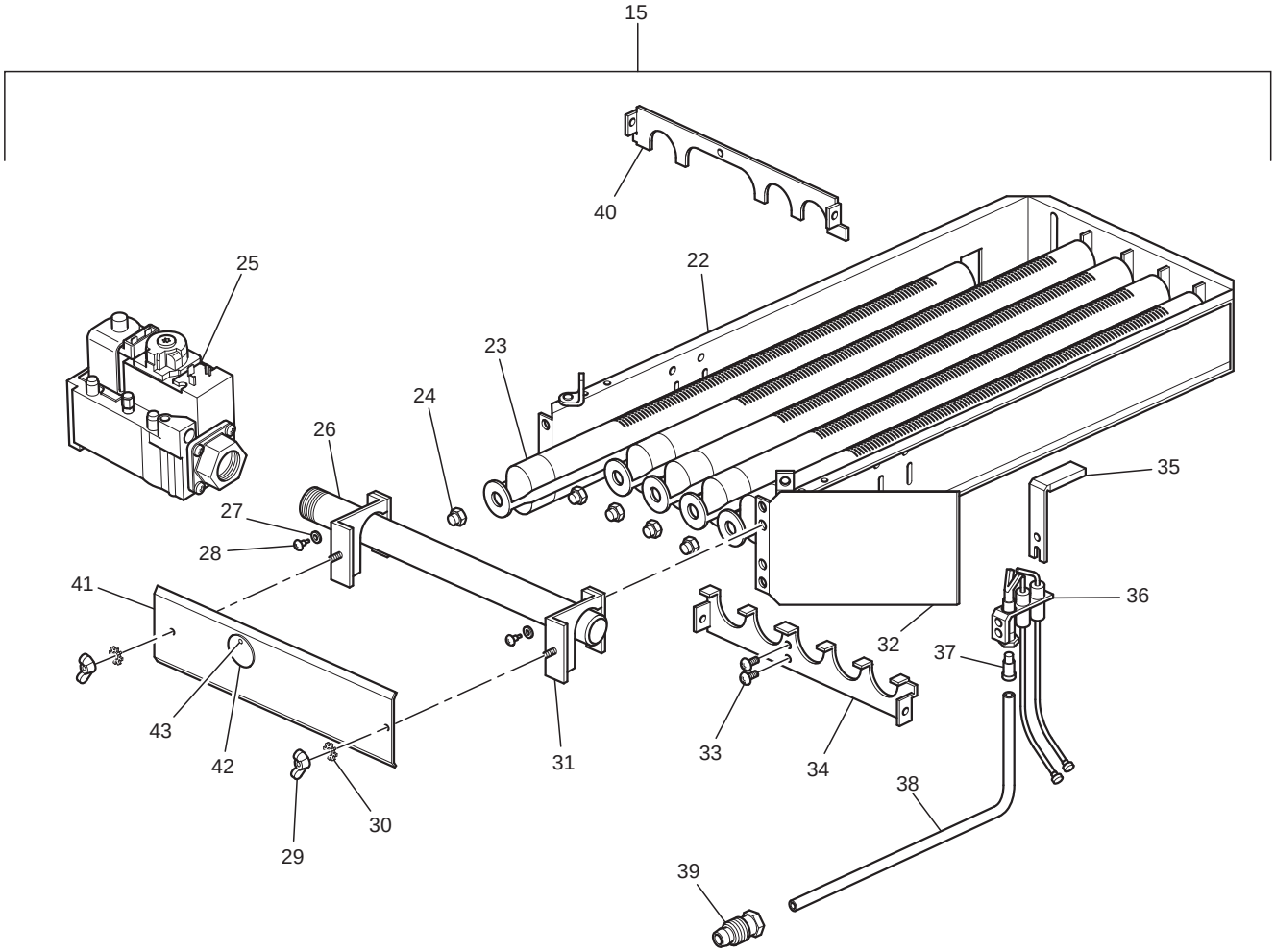

10.13 Control box assembly Parts table - page 100

Fig. 91

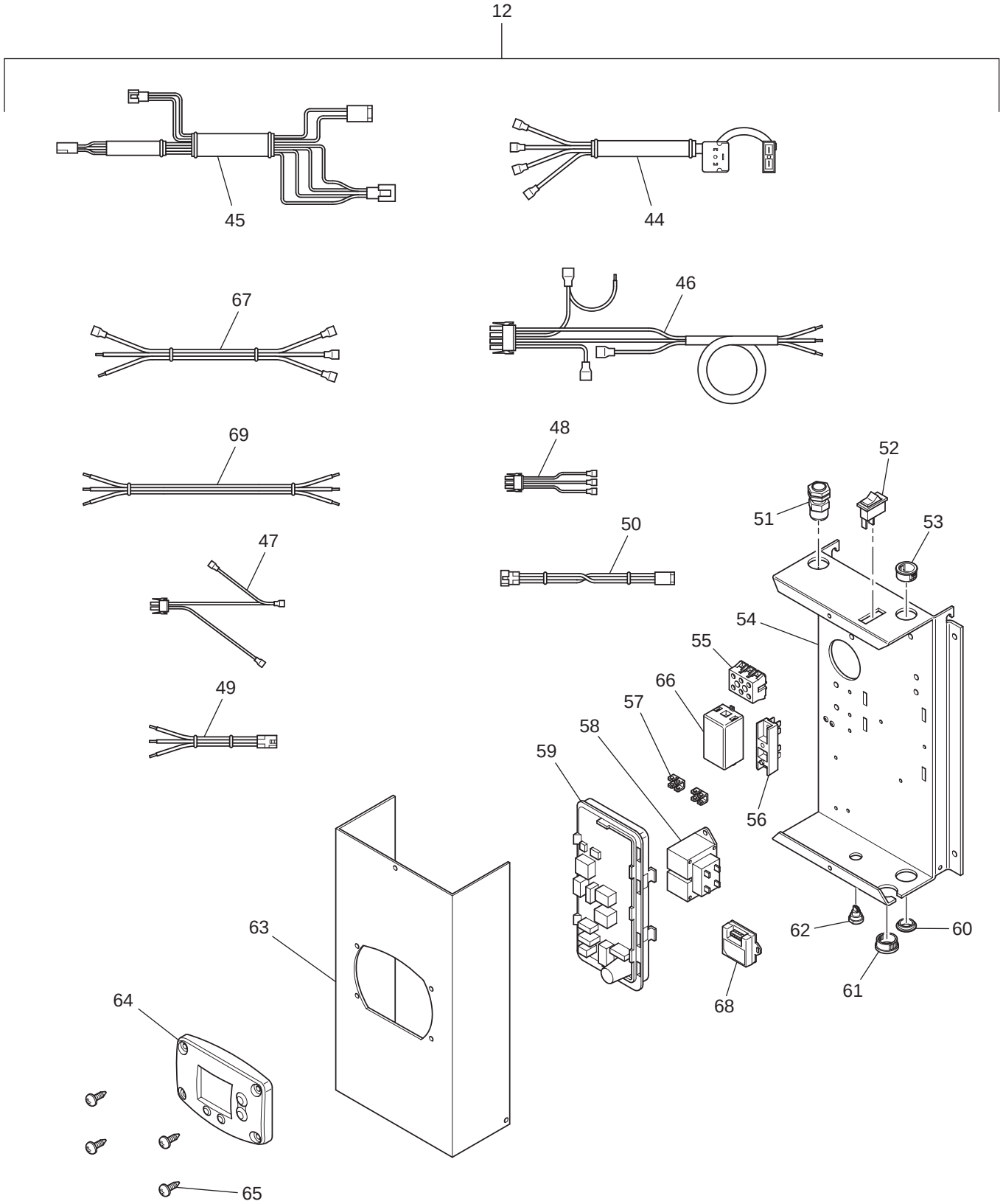

10.14 General assembly parts list: ref fig 89 - page 95

Item Number	Part Number	Description	Qty	32/143 New Auto	54/440 New Auto	62/341 New Auto	65/173 New Auto	81/264 New Auto
1	Z157	Draft Diverter c/w Leg	1		•			
1	Z158	Draft Diverter c/w Leg	1			•		•
1	Z159	Draft Diverter c/w Leg	1				•	
2	Z160	Rear Inlet Nipple	1	•				
3	Z144	Flue Damper 6"	1	•			•	•
3	Z146	Flue Damper 10"	1		•			
3	Z145	Flue Damper 8"	1			•		
4	Z161	Hot Outlet Nipple	1				•	•
5	Z162	Cold Inlet Diptube	1				•	
5	Z163	Cold Inlet Diptube	1					•
6	Z164	Anode	2	•				
6	Z165	Anode	2		•		•	
6	Z166	Anode	2			•		
6	Z167	Anode	2					
6	Z168	Anode	2					•
7	Z169	Baffle Assembly	8	•			•	
7	Z170	Baffle Assembly	11		•			
7	Z170	Baffle Assembly	16			•		
7	Z171	Baffle Assembly	8				•	
7	Z172	Baffle Assembly	8					•
8	Z173	Nipple	1	•	•	•	•	•
9	Z174	Utility Cover	1		•	•	•	•
10A	Z137	Thermstate Lower	1	•			•	•
10A	Z130	Thermstate Lower	1		•	•		
10B	Z136	Thermstate Upper	1		•	•	•	•
11	Z175	Nipple	1	•	•	•	•	•
12	Z129	Control Box Assy (Single Sensor)*	1	•				
12	Z176	Control Box Assy (Single Sensor)#	1	•				
12	Z135	Control Box Assy (Dual Sensor)*	1		•	•		
12	Z177	Control Box Assy (Dual Sensor) #	1		•	•	•	•
12	Z131	Control Box Assy (Dual Sensor)*	1				•	
12	Z132	Control Box Assy (Dual Sensor)*	1					•
13	Z178	Mini Diptube	1	•	•	•	•	•
14	Z179	Nipple	1	•	•	•	•	•
15	Z180	Burner Assy Nat	1	•				
15	Z181	Burner Assy Nat	1		•			
15	Z182	Burner Assy Nat	1			•		
15	Z183	Burner Assy Nat	1				•	
15	Z184	Burner Assy Nat	1					•
16	Z190	Clean Out Door Seal	1	•	•	•	•	•
17	Z191	Clean Out Door Cover	1	•	•	•	•	•
18	Z192	Clean Out Door Bolts	6	•	•	•	•	•
19	Z193	Clean Out Assy Cover	1	•	•	•	•	•
20	Z194	Clean Out Cover Screws	1	•	•	•	•	•
21	Z195	Nipple	1	•	•	•		
22	Z196	Powered Anode *	1	•	•	•		
22	Z197	Powered Anode *	1				•	•
23	Z198	Hole Closure *	1	•	•	•	•	•
24	Z199	Powered Anode Harnes *	1	•				
24	Z200	Powered Anode Harnes *	1		•	•		
24	Z201	Powered Anode Harnes *	1				•	
24	Z202	Powered Anode Harnes *	1					•
24	Z202	Powered Anode Harness *	1					•

10.15 Burner assembly parts list: ref fig 90 - page 96

Item Number	Part Number	Description	Qty	32/143 Auto	54/440 New Auto	62/341 New Auto	65/173 New Auto	81/264 New Auto
22	Z203	Burner Rack	1	•			•	•
22	Z204	Burner Rack	1		•			
22	Z205	Burner Rack	1			•		
23	Z206	Burner Bar	1	•	•	•	•	•
24	Z207	Burner Injector 2.40 mm Nat	5	•				
24	Z208	Burner Injector 3.25 mm Nat	5		•			
24	Z208	Burner Injector 3.25 mm Nat	9					•
24	Z209	Burner Injector 3.18 mm Nat	7			•		
24	Z210	Burner Injector 2.58 mm Nat	5				•	
25	Z216	Gas Valve Nat	1	•	•	•	•	•
26	Z218	Burner Manifold	1	•			•	•
26	Z219	Burner Manifold	1		•			
26	Z220	Burner Manifold	1			•		
27	Z222	External 10 Washer	4	•	•	•	•	•
28	Z223	10 Machine Screw	4	•	•	•	•	•
29	Z224	Wing Nut	2	•	•	•	•	•
30	Z225	Tooth Washer	2	•	•	•	•	•
31	Z226	Z Shield c/w Welded Stud	2	•	•	•	•	•
32	Z227	Wind Angle Shield	2	•	•	•	•	•
33	Z228	Pilot Mounting Screw	2	•	•	•	•	•
34	Z229	Burner Support	1	•			•	•
34	Z230	Burner Support	1		•			
34	Z231	Burner Support	1			•		
35	Z233	Pilot Shield	1	•	•	•	•	•
36	Z234	Pilot Assy Nat	1	•	•	•	•	•
37	Z236	Pilot Orfice Nat	1	•	•	•	•	•
38	Z237	Pilot Pipe	1	•			•	•
38	Z238	Pilot Pipe	1		•	•		
39	Z239	Ferrule Fitting	1	•	•	•	•	•
40	Z240	Draft Panel	1	•			•	•
40	Z241	Draft Panel	1		•			
40	Z242	Draft Panel	1			•		
41	Z243	Wind Shield	1	•			•	•
41	Z244	Wind Shield	1		•			
41	Z245	Wind Shield	1			•		
42	Z246	Cover Peep Sight	1	•	•	•	•	•
43	Z247	Rivet	1	•	•	•	•	•

10.16 Control box assembly parts list: ref fig 91 - page 97

Item Number	Part Number	Description	Qty	32/143 Auto	54/440 New Auto	62/341 New Auto	65/173 New Auto	81/264 New Auto
44	Z248	Gas Control Valve Harness	1	•	•	•	•	•
45	Z249	Thermostate Harness	1	•				
45	Z250	Thermostate Harness	1		•	•	•	•
46	Z251	Power Switch Harness	1	•	•	•	•	•
47	Z252	Primary Tranformer Wiring Harnerss	1	•	•	•	•	•
48	Z253	Secondary Transformer Wiring Harnes	1	•	•	•	•	•
49	Z254	Display Cover Harness	1	•	•	•	•	•
50	Z255	Display Control Harness	1	•	•	•	•	•
51	Z256	Water Tight Bushing	1	•	•	•	•	•
52	Z143	On/off Switch	1	•	•	•	•	•
53	Z257	Snap Bush Top	1	•	•	•	•	•
54	Z258	Control Panel	1	•	•	•	•	•
55	Z259	Terminal Block	1	•	•	•	•	•
56	Z260	Terminal Strip	1	•	•	•	•	•
57	Z261	Terminal	1	•	•	•	•	•
58	Z141	Transformer	1	•	•	•	•	•
59	Z138	Control Board	1	•				
59	Z139	Control Board	1		•	•	•	•
60	Z262	Bottom Plug	1	•	•	•	•	•
61	Z263	Snap Bush Bottom	1	•	•	•	•	•
62	Z264	Strain Relief Bushing	1	•	•	•	•	•
63	Z265	Control Box Cover	1	•	•	•	•	•
64	Z140	Display Controller	1	•	•	•	•	•
65	Z266	Screws 8-18 x 0.75	4	•	•	•	•	•
66	Z267	Power Anode Control *	1	•	•	•	•	•
67	Z268	Power Anode Control Harnes *	1	•	•	•	•	•
68	Z269	Alarm Module	1	•	•	•	•	•
69	Z270	Alarm Module Harnes	1	•	•	•	•	•
70	Z271	Noise Harnes	1	•	•	•	•	•

Used on models prior to serial no: KE183350087
* Used on models after serial no: KE18350087

10.17 Dismantling, disposal and recycling

Warning
Only qualified competent persons should remove and dismantle the appliance.

Before removing and dismantling please ensure you safely remove the power supply and isolated the appliance from the water and gas connections.

Dispose of the appliance correctly according to the laws and regulations in force. The appliance and accessories cannot be discarded along with normal household waste and should be recycled where appropriate.

More than 90% of the materials that make up the appliance are recyclable.

© Copyright

All technical and technological information contained in these technical instructions, as well as any drawings and technical descriptions supplied, remain our property and shall not be multiplied without our prior consent in writing. Subject to alterations.

Register now to activate your warranty **www.andrewswaterheaters.co.uk/register-a-warranty.**
Please make sure you attach proof of purchase for your warranty to be monitored.

All descriptions and illustrations provided in this document have been carefully prepared but we reserve the right to make changes and improvements in our products which may affect the accuracy of the information contained in this leaflet. All goods are sold subject to our standard Conditions of Sale which are available on request.

May 2016

Customer support
Monday - Friday
8am - 5pm

Sales
0345 070 1055

Technical
0345 070 1057

Website
andrewswaterheaters.co.uk

Twitter
@AndrewsWH

ANDREWS
WATER HEATERS